BECKHOFF New Automation Technology

Documentation | EN

Control Drawing I/O, CX, CPX

Connection diagrams and Ex markings

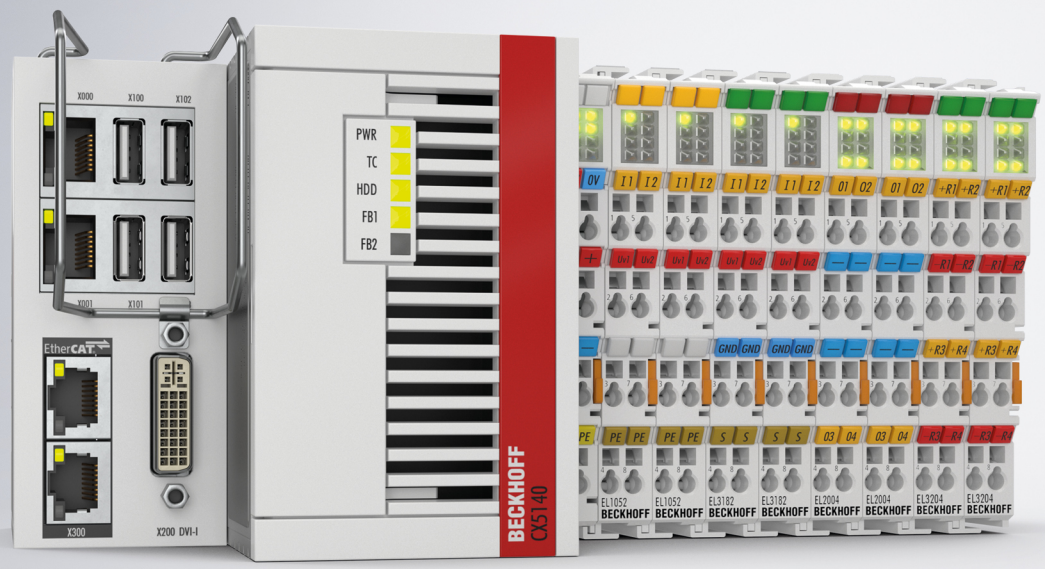

2021-03-01 | Version: 1.1.0

Table of contents

1 Foreword ... 7
1.1 Notes on the documentation ... 7
1.2 Safety instructions ... 8
1.3 Documentation issue status ... 9
2 Connection diagramms ... 10
2.1 EtherCAT Coupler ... 10
2.1.1 EK1100 ... 10
2.1.2 EK1101 ... 11
2.1.3 EK1122-0000 ... 12
2.1.4 EK1122-0008 ... 13
2.1.5 EK9300 ... 14
2.1.6 EKM1101 ... 15
2.2 EtherCAT Terminals with digital inputs ... 16
2.2.1 EL1002/ES1002 ... 16
2.2.2 EL1004/ES1004 ... 17
2.2.3 EL1008/ES1008 ... 18
2.2.4 EL1052/ES1052 ... 19
2.2.5 EL1054/ES1054 ... 20
2.2.6 EL1262/ES1262 ... 21
2.2.7 EL1918 ... 22
2.3 EtherCAT Terminals with digital outputs ... 23
2.3.1 EL2008/ES2008 ... 23
2.3.2 EL2014 ... 24
2.3.3 EL2022/ES2022 ... 25
2.3.4 EL2535-0002/ES2535-0002 ... 26
2.3.5 EL2535-0005 ... 27
2.3.6 EL2794 ... 28
2.3.7 EL2809 ... 29
2.3.8 EL2904 ... 30
2.4 EtherCAT Terminals with analog inputs ... 31
2.4.1 EL3044/ES3044 ... 31
2.4.2 EL3104/ES3104 ... 32
2.4.3 EL3124/ES3124 ... 33
2.4.4 EL3151/ES3151 ... 34
2.4.5 EL3152/ES3152 ... 35
2.4.6 EL3154/ES3154 ... 36
2.4.7 EL3174-0000 ... 37
2.4.8 EL3174-0002 ... 38
2.4.9 EL3174-0032 ... 39
2.4.10 EL3182/ES3182 ... 40
2.4.11 EL3204/ES3204 ... 41
2.4.12 EL3314 ... 42
2.4.13 EL3318 ... 43
2.4.14 EL3356-0010 ... 44

2.4.15 EL3702/ES3702 ... 45
2.5 EtherCAT Terminals with analog outputs ... 46
2.5.1 EL4014/ES4014 ... 46
2.5.2 EL4022/ES4022 ... 47
2.5.3 EL4732/ES4732 ... 48
2.6 Further EtherCAT Terminals ... 49
2.6.1 EL5152/ES5152 ... 49
2.6.2 EL6021-0000 ... 50
2.6.3 EL6021-1001 ... 51
2.6.4 EL6070 ... 52
2.6.5 EL6601 ... 53
2.6.6 EL9550/ES9550 ... 54
2.7 Bus Coupler ... 55
2.7.1 BK3120 ... 55
2.8 Bus Terminals ... 56
2.8.1 KL1352/KS1352 ... 56
2.8.2 KL1501/KS1501 ... 57
2.8.3 KL2408/KS2408 ... 58
2.8.4 KL2502/KS2502 ... 59
2.8.5 KL3012/KS3012 ... 60
2.8.6 KL3054/KS3054 ... 61
2.8.7 KL4424/KS4424 ... 62
2.8.8 KL9010 ... 63
2.8.9 KL9110/KS9110 ... 64
2.9 Embedded PCs ... 65
2.9.1 CX5120 ... 65
2.9.2 CX5130 ... 66
2.9.3 CX5140 ... 67
2.9.4 CX8010 ... 68
2.9.5 CX8030 ... 69
2.9.6 CX8031 ... 70
2.9.7 CX8050 ... 71
2.9.8 CX8051 ... 72
2.9.9 CX8080 ... 73
2.9.10 CX8090 ... 74
2.9.11 CX8091 ... 75
2.9.12 CX8093 ... 76
2.9.13 CX8095 ... 77
2.9.14 CX9020 ... 78
2.10 Control Panels and Panel PCs ... 79
2.10.1 CPX27xx ... 79
2.10.2 CPX29xx ... 80
2.10.3 CPX37xx ... 81
2.10.4 CPX39xx ... 82

3 Ex markings ... 83
3.1 Ex marking on coupler housings ... 83

3.2 Ex marking on terminal housings 84
3.3 Ex marking on HD housings 85
3.4 Ex marking on KM housings 86
3.5 Ex marking on measurement terminals 87
3.6 Ex markings on Control Panels and Panel PCs 88

4 Appendix 91
4.1 Support and Service 91

1 Foreword

1.1 Notes on the documentation

Intended audience

This description is only intended for the use of trained specialists in control and automation engineering who are familiar with the applicable national standards.
It is essential that the documentation and the following notes and explanations are followed when installing and commissioning these components.
It is the duty of the technical personnel to use the documentation published at the respective time of each installation and commissioning.

The responsible staff must ensure that the application or use of the products described satisfy all the requirements for safety, including all the relevant laws, regulations, guidelines and standards.

Disclaimer

The documentation has been prepared with care. The products described are, however, constantly under development.

We reserve the right to revise and change the documentation at any time and without prior announcement.

No claims for the modification of products that have already been supplied may be made on the basis of the data, diagrams and descriptions in this documentation.

Trademarks

Beckhoff®, TwinCAT®, EtherCAT®, EtherCAT G®, EtherCAT G10®, EtherCAT P®, Safety over EtherCAT®, TwinSAFE®, XFC®, XTS® and XPlanar® are registered trademarks of and licensed by Beckhoff Automation GmbH. Other designations used in this publication may be trademarks whose use by third parties for their own purposes could violate the rights of the owners.

Patent Pending

The EtherCAT Technology is covered, including but not limited to the following patent applications and patents: EP1590927, EP1789857, EP1456722, EP2137893, DE102015105702 with corresponding applications or registrations in various other countries.

EtherCAT® is registered trademark and patented technology, licensed by Beckhoff Automation GmbH, Germany.

Copyright

© Beckhoff Automation GmbH & Co. KG, Germany.
The reproduction, distribution and utilization of this document as well as the communication of its contents to others without express authorization are prohibited.
Offenders will be held liable for the payment of damages. All rights reserved in the event of the grant of a patent, utility model or design.

1.2 Safety instructions

Safety regulations

Please note the following safety instructions and explanations!
Product-specific safety instructions can be found on following pages or in the areas mounting, wiring, commissioning etc.

Exclusion of liability

All the components are supplied in particular hardware and software configurations appropriate for the application. Modifications to hardware or software configurations other than those described in the documentation are not permitted, and nullify the liability of Beckhoff Automation GmbH & Co. KG.

Personnel qualification

This description is only intended for trained specialists in control, automation and drive engineering who are familiar with the applicable national standards.

Description of instructions

In this documentation the following instructions are used.
These instructions must be read carefully and followed without fail!

⚠ DANGER

Serious risk of injury!

Failure to follow this safety instruction directly endangers the life and health of persons.

⚠ WARNING

Risk of injury!

Failure to follow this safety instruction endangers the life and health of persons.

⚠ CAUTION

Personal injuries!

Failure to follow this safety instruction can lead to injuries to persons.

NOTE

Damage to environment/equipment or data loss

Failure to follow this instruction can lead to environmental damage, equipment damage or data loss.

Tip or pointer

This symbol indicates information that contributes to better understanding.

1.3 Documentation issue status

Version	Comment
1.1.0	• Connection diagrams of CPX27xx, CPX29xx, CPX37xx and CPX39xx extended for dust • Ex markings for Control Panels and Panel PCs added
1.0.0	• First release (Content identical with version 0.3)
0.3	• Connection diagrams of EL2794, EL6021-0000 and EL6021-1001 extended • Control Panels and Panel PCs added • Ex markings added
0.2	• Further EtherCAT Coupler and EtherCAT Terminals added • Bus Coupler and Bus Terminals added • Embedded PCs added
0.1	• First draft for EtherCAT Coupler and EtherCAT Terminals

2 Connection diagramms

2.1 EtherCAT Coupler

2.1.1 EK1100

non-hazardous location
or
classified hazardous location
Class I, Div. 2, Groups A, B, C, D
or
Zone 2, Group IIC

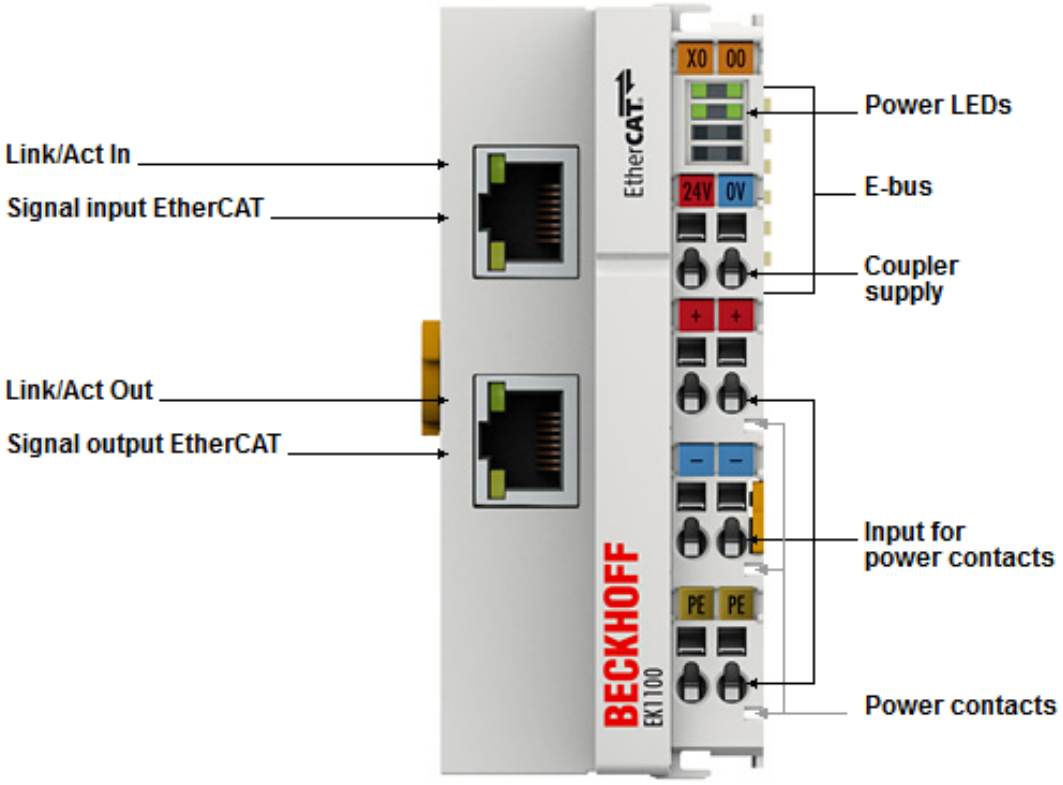

Fig. 1: EK1100 - Connection

NOTE	
	Installation, parameterization, programming etc. Further information on installation, parameterization, programming etc. can be found in the respective terminal-specific documentation, which is available for download on https://www.beckhoff.com/en-us/products/i-o/ethercat-terminals.

2.1.2 EK1101

non-hazardous location

or

classified hazardous location

Class I, Div. 2, Groups A, B, C, D

or

Zone 2, Group IIC

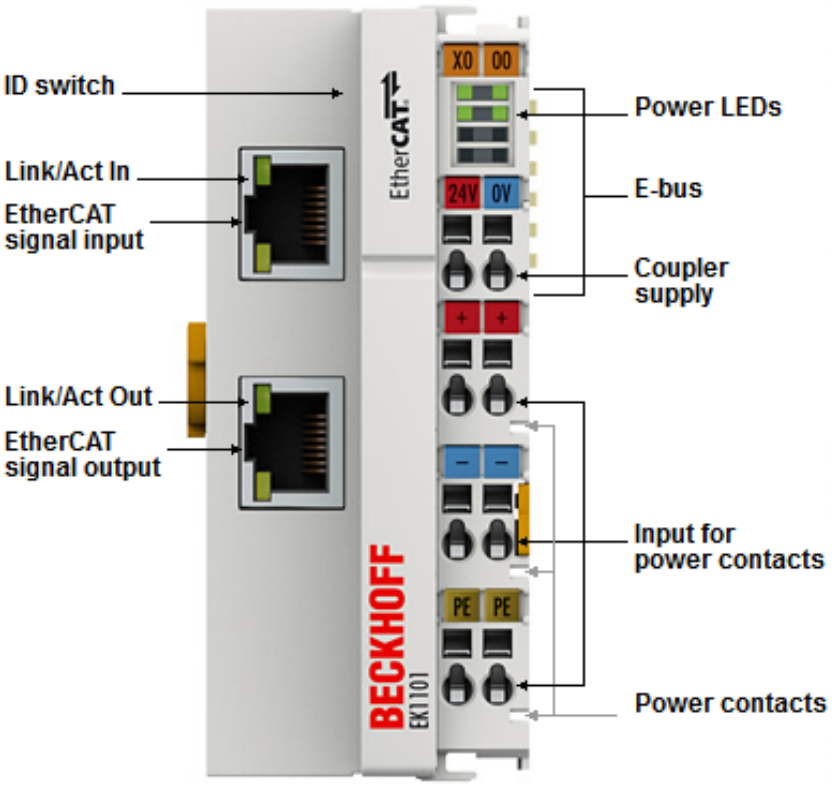

Fig. 2: EK1101 - Connection

NOTE	
	Installation, parameterization, programming etc. Further information on installation, parameterization, programming etc. can be found in the respective terminal-specific documentation, which is available for download on https://www.beckhoff.com/en-us/products/i-o/ethercat-terminals.

2.1.3 EK1122-0000

non-hazardous location

or

classified hazardous location

Class I, Div. 2, Groups A, B, C, D

or

Zone 2, Group IIC

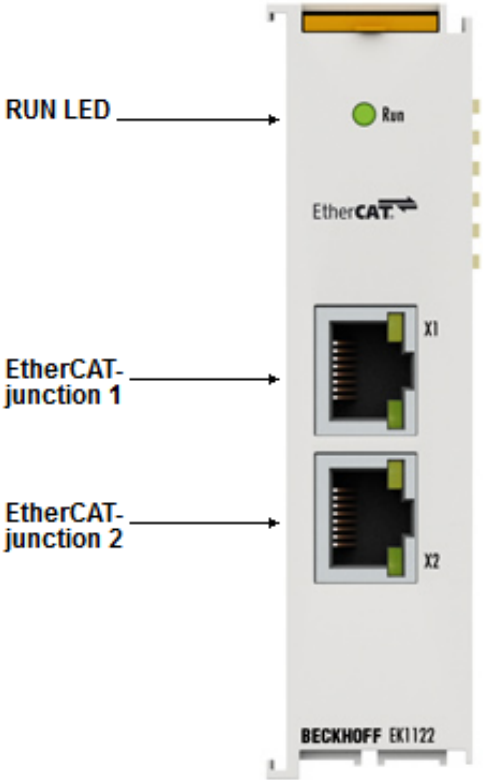

Fig. 3: EK1122-0000 - Connection

NOTE	
	Installation, parameterization, programming etc. Further information on installation, parameterization, programming etc. can be found in the respective terminal-specific documentation, which is available for download on https://www.beckhoff.com/en-us/products/i-o/ethercat-terminals.

2.1.4 EK1122-0008

non-hazardous location

or

classified hazardous location

Class I, Div. 2, Groups A, B, C, D

or

Zone 2, Group IIC

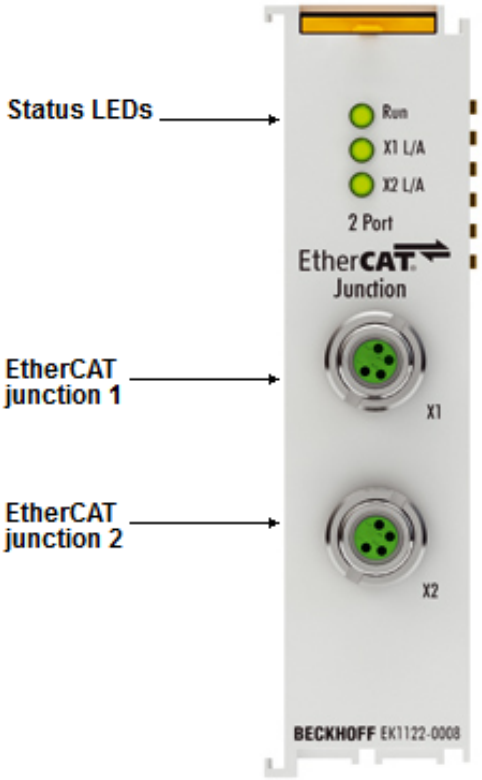

Fig. 4: EK1122-0008 - Connection

NOTE	
	Installation, parameterization, programming etc. Further information on installation, parameterization, programming etc. can be found in the respective terminal-specific documentation, which is available for download on https://www.beckhoff.com/en-us/products/i-o/ethercat-terminals.

2.1.5 EK9300

non-hazardous location

or

classified hazardous location

Class I, Div. 2, Groups A, B, C, D

or

Zone 2, Group IIC

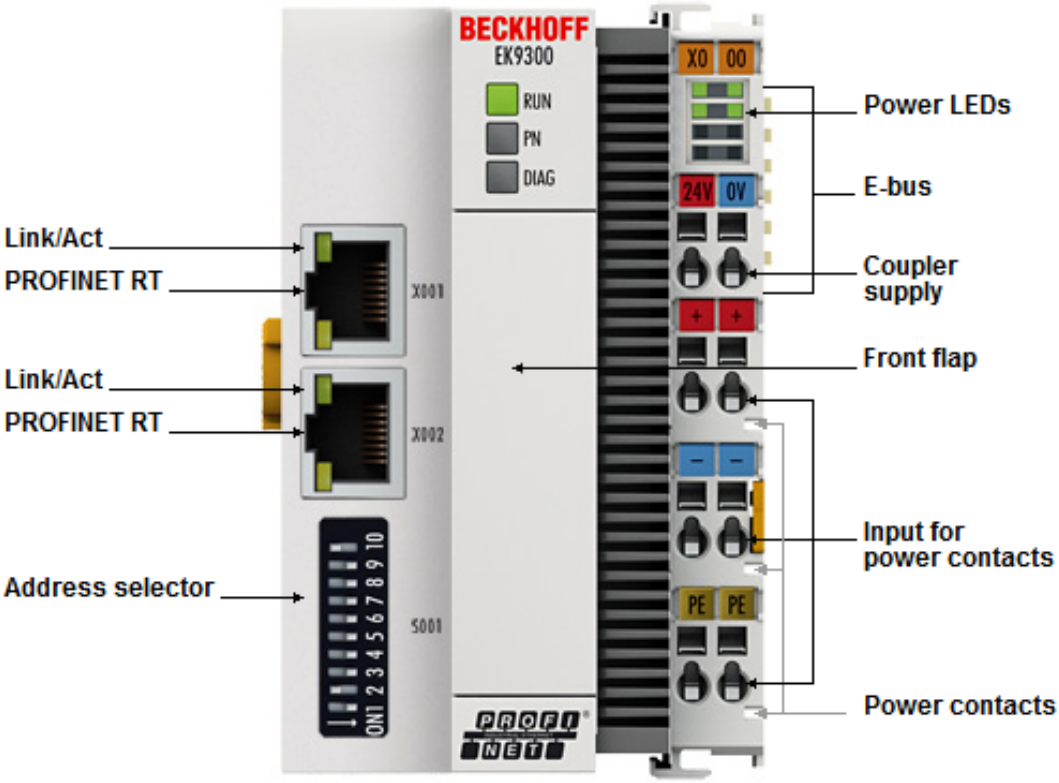

Fig. 5: EK9300 - Connection

NOTE	
	Installation, parameterization, programming etc. Further information on installation, parameterization, programming etc. can be found in the respective terminal-specific documentation, which is available for download on https://www.beckhoff.com/en-us/products/i-o/ethercat-terminals.

2.1.6 EKM1101

non-hazardous location

or

classified hazardous location

Class I, Div. 2, Groups A, B, C, D

or

Zone 2, Group IIC

Fig. 6: EKM1101 - Connection

NOTE	
	Installation, parameterization, programming etc. Further information on installation, parameterization, programming etc. can be found in the respective terminal-specific documentation, which is available for download on https://www.beckhoff.com/en-us/products/i-o/ethercat-terminals.

2.2 EtherCAT Terminals with digital inputs

2.2.1 EL1002/ES1002

non-hazardous location or classified hazardous location Class I, Div. 2, Groups A, B, C, D or Zone 2, Group IIC	non-hazardous location or classified hazardous location Class I, Div. 2, Groups A, B, C, D Class II, Div. 2, Groups E, F, G or Zone 2, Group IIC Zone 22, Group IIIC

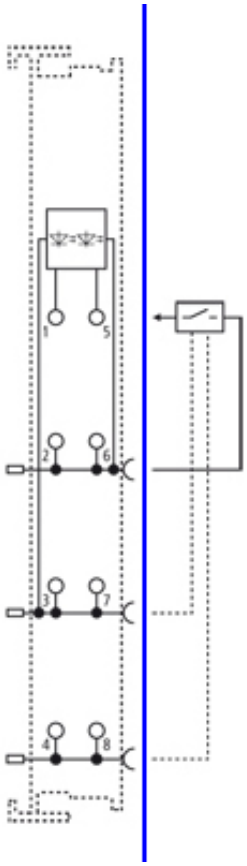

Fig. 7: EL1002/ES1002 - Sensor connection

NOTE	
	Installation, parameterization, programming etc. Further information on installation, parameterization, programming etc. can be found in the respective terminal-specific documentation, which is available for download on https://www.beckhoff.com/en-us/products/i-o/ethercat-terminals.

2.2.2 EL1004/ES1004

non-hazardous location	non-hazardous location
or	or
classified hazardous location	classified hazardous location
Class I, Div. 2, Groups A, B, C, D	Class I, Div. 2, Groups A, B, C, D
or	Class II, Div. 2, Groups E, F, G
Zone 2, Group IIC	or
	Zone 2, Group IIC
	Zone 22, Group IIIC

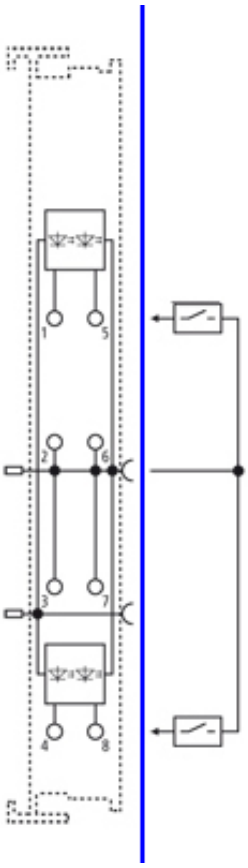

Fig. 8: EL1004/ES1004 - Sensor connection

NOTE	
	Installation, parameterization, programming etc. Further information on installation, parameterization, programming etc. can be found in the respective terminal-specific documentation, which is available for download on https://www.beckhoff.com/en-us/products/i-o/ethercat-terminals.

2.2.3 EL1008/ES1008

non-hazardous location	non-hazardous location
or	or
classified hazardous location	classified hazardous location
Class I, Div. 2, Groups A, B, C, D	Class I, Div. 2, Groups A, B, C, D
or	Class II, Div. 2, Groups E, F, G
Zone 2, Group IIC	or
	Zone 2, Group IIC
	Zone 22, Group IIIC

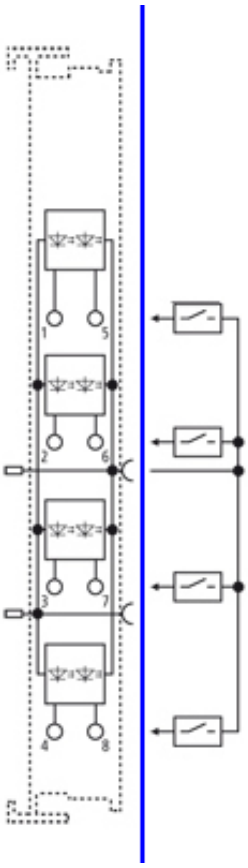

Fig. 9: EL1008/ES1008 - Sensor connection

NOTE	
	Installation, parameterization, programming etc. Further information on installation, parameterization, programming etc. can be found in the respective terminal-specific documentation, which is available for download on https://www.beckhoff.com/en-us/products/i-o/ethercat-terminals.

2.2.4 EL1052/ES1052

non-hazardous location	non-hazardous location
or	or
classified hazardous location	classified hazardous location
Class I, Div. 2, Groups A, B, C, D	Class I, Div. 2, Groups A, B, C, D
or	Class II, Div. 2, Groups E, F, G
Zone 2, Group IIC	or
	Zone 2, Group IIC
	Zone 22, Group IIIC

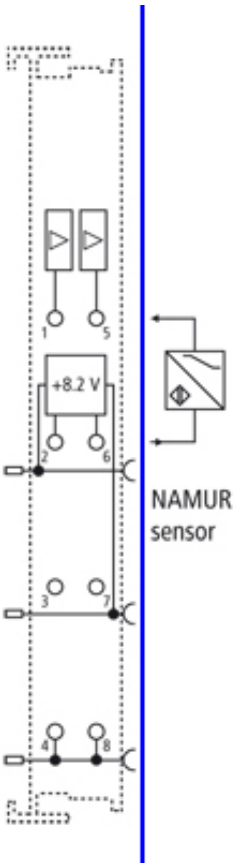

Fig. 10: EL1052/ES1052 - Sensor connection

NOTE	
	Installation, parameterization, programming etc. Further information on installation, parameterization, programming etc. can be found in the respective terminal-specific documentation, which is available for download on https://www.beckhoff.com/en-us/products/i-o/ethercat-terminals.

2.2.5 EL1054/ES1054

non-hazardous location or classified hazardous location Class I, Div. 2, Groups A, B, C, D or Zone 2, Group IIC	non-hazardous location or classified hazardous location Class I, Div. 2, Groups A, B, C, D Class II, Div. 2, Groups E, F, G or Zone 2, Group IIC Zone 22, Group IIIC

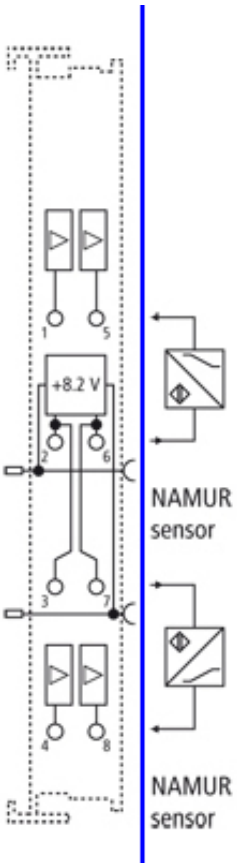

Fig. 11: EL1054/ES1054 - Sensor connection

NOTE	
	Installation, parameterization, programming etc. Further information on installation, parameterization, programming etc. can be found in the respective terminal-specific documentation, which is available for download on https://www.beckhoff.com/en-us/products/i-o/ethercat-terminals.

2.2.6 EL1262/ES1262

non-hazardous location	non-hazardous location
or	or
classified hazardous location	classified hazardous location
Class I, Div. 2, Groups A, B, C, D	Class I, Div. 2, Groups A, B, C, D
or	Class II, Div. 2, Groups E, F, G
Zone 2, Group IIC	or
	Zone 2, Group IIC
	Zone 22, Group IIIC

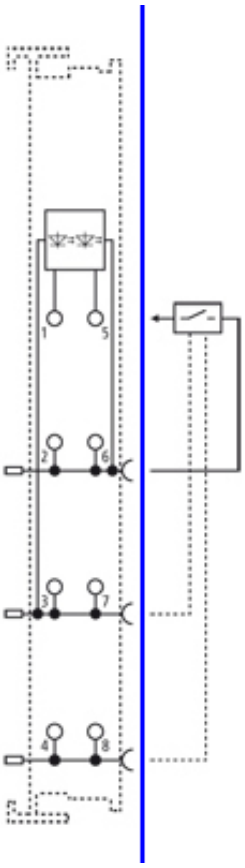

Fig. 12: EL1262/ES1262 - Sensor connection

NOTE

Installation, parameterization, programming etc.

Further information on installation, parameterization, programming etc. can be found in the respective terminal-specific documentation, which is available for download on https://www.beckhoff.com/en-us/products/i-o/ethercat-terminals.

2.2.7 EL1918

non-hazardous location	non-hazardous location
or	or
classified hazardous location	classified hazardous location
Class I, Div. 2, Groups A, B, C, D	Class I, Div. 2, Groups A, B, C, D
or	Class II, Div. 2, Groups E, F, G
Zone 2, Group IIC	or
	Zone 2, Group IIC
	Zone 22, Group IIIC

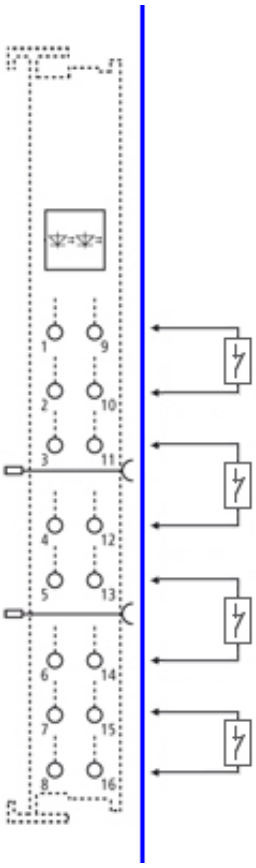

Fig. 13: EL1918 - Sensor connection

NOTE	
	Installation, parameterization, programming etc. Further information on installation, parameterization, programming etc. can be found in the respective terminal-specific documentation, which is available for download on https://www.beckhoff.com/en-us/products/i-o/ethercat-terminals.

2.3 EtherCAT Terminals with digital outputs

2.3.1 EL2008/ES2008

non-hazardous location or classified hazardous location Class I, Div. 2, Groups A, B, C, D or Zone 2, Group IIC	non-hazardous location or classified hazardous location Class I, Div. 2, Groups A, B, C, D Class II, Div. 2, Groups E, F, G or Zone 2, Group IIC Zone 22, Group IIIC

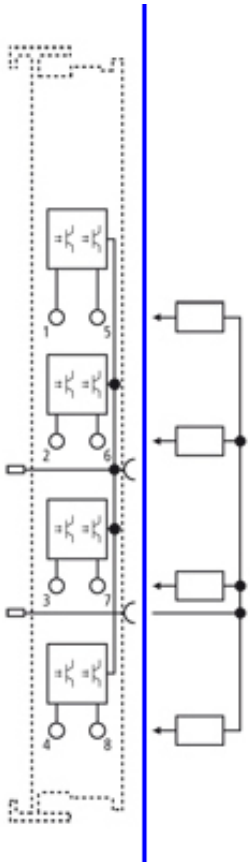

Fig. 14: EL2008/EL2008 - Actuator connection

NOTE	
	Installation, parameterization, programming etc. Further information on installation, parameterization, programming etc. can be found in the respective terminal-specific documentation, which is available for download on https://www.beckhoff.com/en-us/products/i-o/ethercat-terminals.

2.3.2 EL2014

non-hazardous location	non-hazardous location
or	or
classified hazardous location	classified hazardous location
Class I, Div. 2, Groups A, B, C, D	Class I, Div. 2, Groups A, B, C, D
or	Class II, Div. 2, Groups E, F, G
Zone 2, Group IIC	or
	Zone 2, Group IIC
	Zone 22, Group IIIC

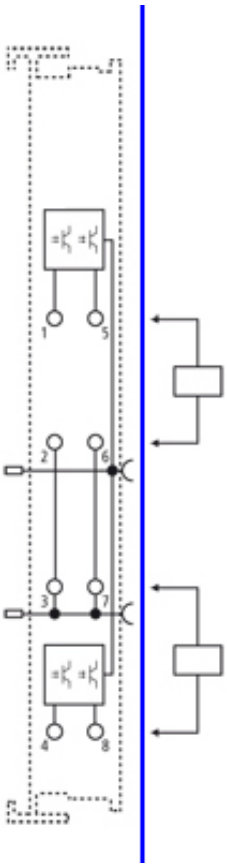

Fig. 15: EL2014 - Actuator connection

NOTE	
	Installation, parameterization, programming etc. Further information on installation, parameterization, programming etc. can be found in the respective terminal-specific documentation, which is available for download on https://www.beckhoff.com/en-us/products/i-o/ethercat-terminals.

2.3.3 EL2022/ES2022

non-hazardous location	non-hazardous location
or	or
classified hazardous location	classified hazardous location
Class I, Div. 2, Groups A, B, C, D	Class I, Div. 2, Groups A, B, C, D
or	Class II, Div. 2, Groups E, F, G
Zone 2, Group IIC	or
	Zone 2, Group IIC
	Zone 22, Group IIIC

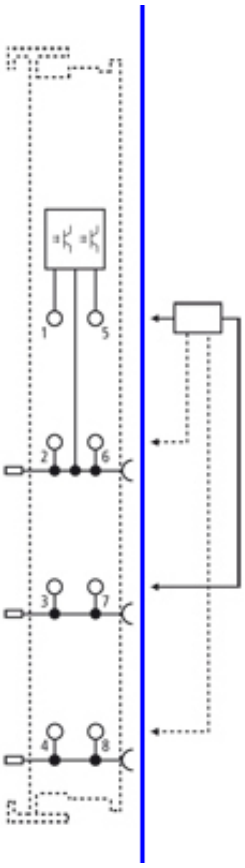

Fig. 16: EL2022/EL2022 - Actuator connection

NOTE	
	Installation, parameterization, programming etc. Further information on installation, parameterization, programming etc. can be found in the respective terminal-specific documentation, which is available for download on https://www.beckhoff.com/en-us/products/i-o/ethercat-terminals.

2.3.4 EL2535-0002/ES2535-0002

non-hazardous location	non-hazardous location
or	or
classified hazardous location	classified hazardous location
Class I, Div. 2, Groups A, B, C, D	Class I, Div. 2, Groups A, B, C, D
or	Class II, Div. 2, Groups E, F, G
Zone 2, Group IIC	or
	Zone 2, Group IIC
	Zone 22, Group IIIC

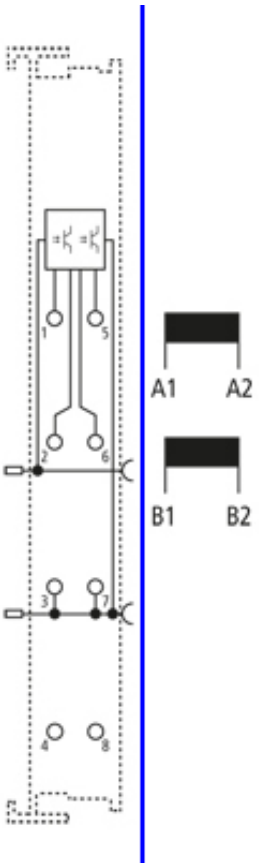

Fig. 17: EL2535-0002/2535-0002 - Actuator connection

NOTE	
	Installation, parameterization, programming etc. Further information on installation, parameterization, programming etc. can be found in the respective terminal-specific documentation, which is available for download on https://www.beckhoff.com/en-us/products/i-o/ethercat-terminals.

2.3.5 EL2535-0005

non-hazardous location	non-hazardous location
or	or
classified hazardous location	classified hazardous location
Class I, Div. 2, Groups A, B, C, D	Class I, Div. 2, Groups A, B, C, D
or	Class II, Div. 2, Groups E, F, G
Zone 2, Group IIC	or
	Zone 2, Group IIC
	Zone 22, Group IIIC

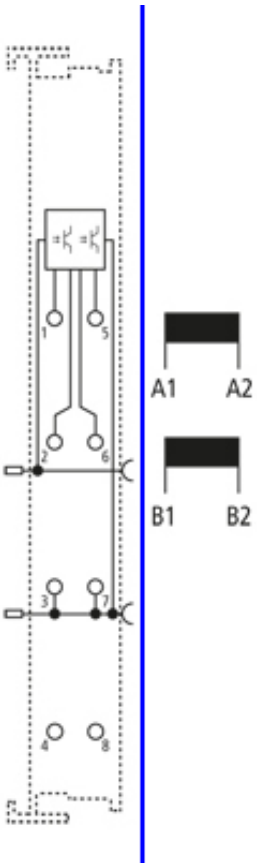

Fig. 18: EL2535-0005 - Actuator connection

NOTE	
	Installation, parameterization, programming etc. Further information on installation, parameterization, programming etc. can be found in the respective terminal-specific documentation, which is available for download on https://www.beckhoff.com/en-us/products/i-o/ethercat-terminals.

2.3.6 EL2794

non-hazardous location or classified hazardous location Class I, Div. 2, Groups A, B, C, D or Zone 2, Group IIC	non-hazardous location or classified hazardous location Class I, Div. 2, Groups A, B, C, D Class II, Div. 2, Groups E, F, G or Zone 2, Group IIC Zone 22, Group IIIC

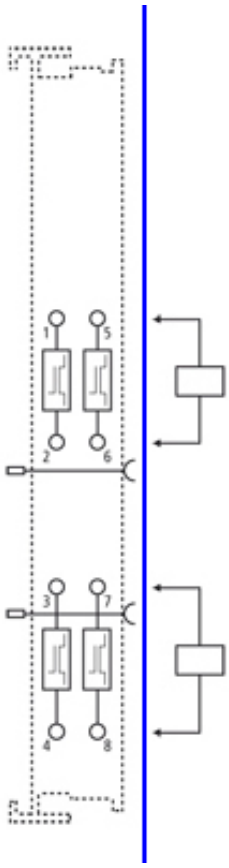

Fig. 19: EL2794 - Actuator connection

NOTE	
	Installation, parameterization, programming etc. Further information on installation, parameterization, programming etc. can be found in the respective terminal-specific documentation, which is available for download on https://www.beckhoff.com/en-us/products/i-o/ethercat-terminals.

2.3.7 EL2809

non-hazardous location	non-hazardous location
or	or
classified hazardous location	classified hazardous location
Class I, Div. 2, Groups A, B, C, D	Class I, Div. 2, Groups A, B, C, D
or	Class II, Div. 2, Groups E, F, G
Zone 2, Group IIC	or
	Zone 2, Group IIC
	Zone 22, Group IIIC

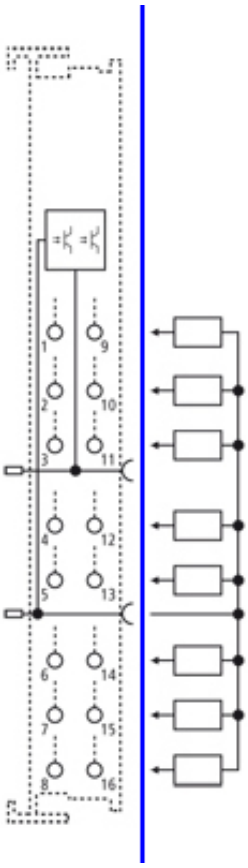

Fig. 20: EL2809 - Actuator connection

NOTE	
	Installation, parameterization, programming etc. Further information on installation, parameterization, programming etc. can be found in the respective terminal-specific documentation, which is available for download on https://www.beckhoff.com/en-us/products/i-o/ethercat-terminals.

2.3.8 EL2904

non-hazardous location	non-hazardous location
or	or
classified hazardous location	classified hazardous location
Class I, Div. 2, Groups A, B, C, D	Class I, Div. 2, Groups A, B, C, D
or	Class II, Div. 2, Groups E, F, G
Zone 2, Group IIC	or
	Zone 2, Group IIC
	Zone 22, Group IIIC

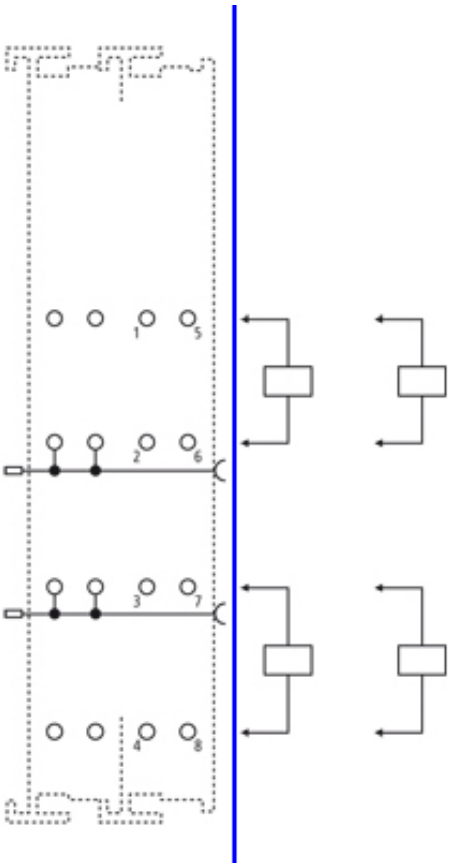

Fig. 21: EL2904 - Actuator connection

NOTE	
	Installation, parameterization, programming etc. Further information on installation, parameterization, programming etc. can be found in the respective terminal-specific documentation, which is available for download on https://www.beckhoff.com/en-us/products/i-o/ethercat-terminals.

2.4 EtherCAT Terminals with analog inputs

2.4.1 EL3044/ES3044

non-hazardous location or classified hazardous location Class I, Div. 2, Groups A, B, C, D or Zone 2, Group IIC	non-hazardous location or classified hazardous location Class I, Div. 2, Groups A, B, C, D Class II, Div. 2, Groups E, F, G or Zone 2, Group IIC Zone 22, Group IIIC

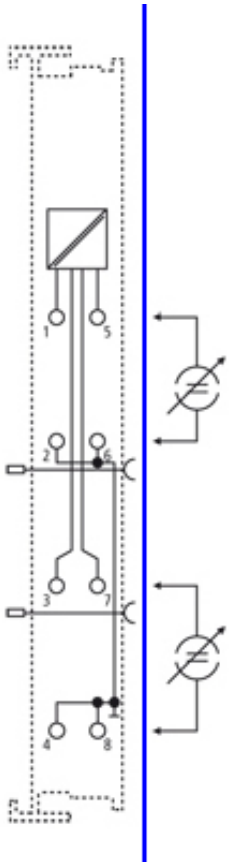

Fig. 22: EL3044/ES3044 - Sensor connection

NOTE	
	Installation, parameterization, programming etc. Further information on installation, parameterization, programming etc. can be found in the respective terminal-specific documentation, which is available for download on https://www.beckhoff.com/en-us/products/i-o/ethercat-terminals.

2.4.2 EL3104/ES3104

non-hazardous location	non-hazardous location
or	or
classified hazardous location	classified hazardous location
Class I, Div. 2, Groups A, B, C, D	Class I, Div. 2, Groups A, B, C, D
or	Class II, Div. 2, Groups E, F, G
Zone 2, Group IIC	or
	Zone 2, Group IIC
	Zone 22, Group IIIC

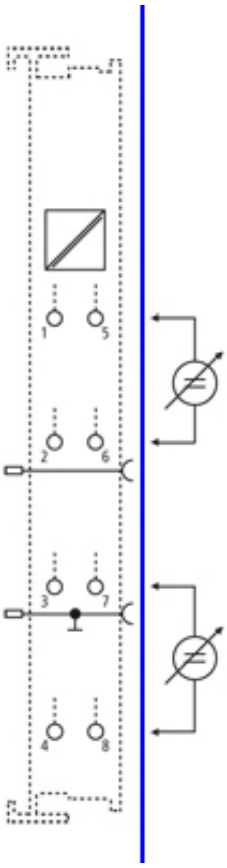

Fig. 23: EL3104/ES3104 - Sensor connection

NOTE	
	Installation, parameterization, programming etc. Further information on installation, parameterization, programming etc. can be found in the respective terminal-specific documentation, which is available for download on https://www.beckhoff.com/en-us/products/i-o/ethercat-terminals.

2.4.3 EL3124/ES3124

non-hazardous location	non-hazardous location
or	or
classified hazardous location	classified hazardous location
Class I, Div. 2, Groups A, B, C, D	Class I, Div. 2, Groups A, B, C, D
or	Class II, Div. 2, Groups E, F, G
Zone 2, Group IIC	or
	Zone 2, Group IIC
	Zone 22, Group IIIC

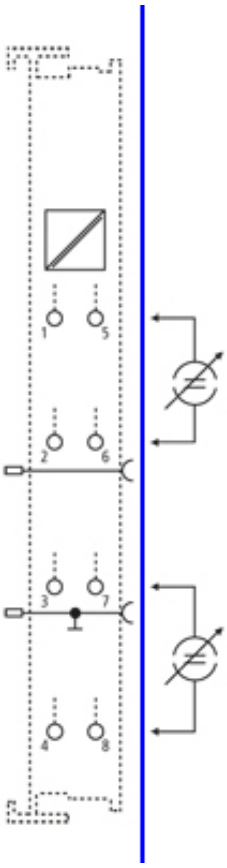

Fig. 24: EL3124/ES3124 - Sensor connection

NOTE

Installation, parameterization, programming etc.

Further information on installation, parameterization, programming etc. can be found in the respective terminal-specific documentation, which is available for download on https://www.beckhoff.com/en-us/products/i-o/ethercat-terminals.

2.4.4 EL3151/ES3151

non-hazardous location	non-hazardous location
or	or
classified hazardous location	classified hazardous location
Class I, Div. 2, Groups A, B, C, D	Class I, Div. 2, Groups A, B, C, D
or	Class II, Div. 2, Groups E, F, G
Zone 2, Group IIC	or
	Zone 2, Group IIC
	Zone 22, Group IIIC

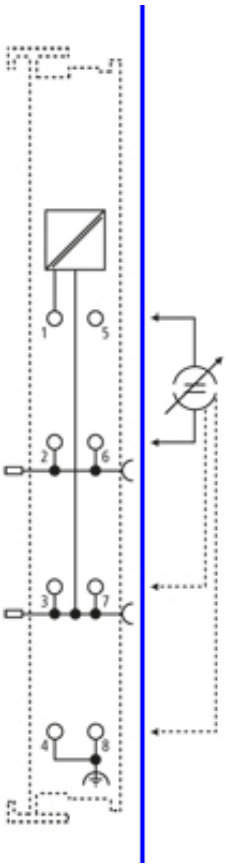

Fig. 25: EL3151/ES3151 - Sensor connection

NOTE

Installation, parameterization, programming etc.

Further information on installation, parameterization, programming etc. can be found in the respective terminal-specific documentation, which is available for download on https://www.beckhoff.com/en-us/products/i-o/ethercat-terminals.

2.4.5 EL3152/ES3152

non-hazardous location	non-hazardous location
or	or
classified hazardous location	classified hazardous location
Class I, Div. 2, Groups A, B, C, D	Class I, Div. 2, Groups A, B, C, D
or	Class II, Div. 2, Groups E, F, G
Zone 2, Group IIC	or
	Zone 2, Group IIC
	Zone 22, Group IIIC

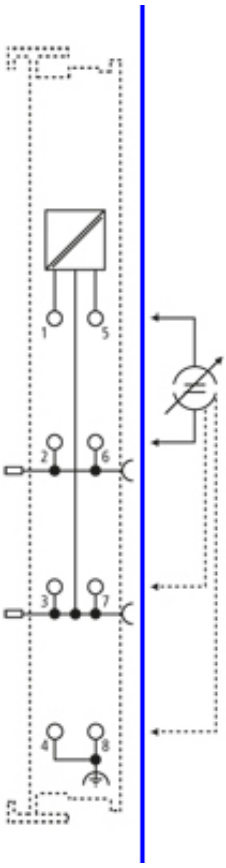

Fig. 26: EL3152/ES3152 - Sensor connection

NOTE	
	Installation, parameterization, programming etc. Further information on installation, parameterization, programming etc. can be found in the respective terminal-specific documentation, which is available for download on https://www.beckhoff.com/en-us/products/i-o/ethercat-terminals.

2.4.6 EL3154/ES3154

non-hazardous location	non-hazardous location
or	or
classified hazardous location	classified hazardous location
Class I, Div. 2, Groups A, B, C, D	Class I, Div. 2, Groups A, B, C, D
or	Class II, Div. 2, Groups E, F, G
Zone 2, Group IIC	or
	Zone 2, Group IIC
	Zone 22, Group IIIC

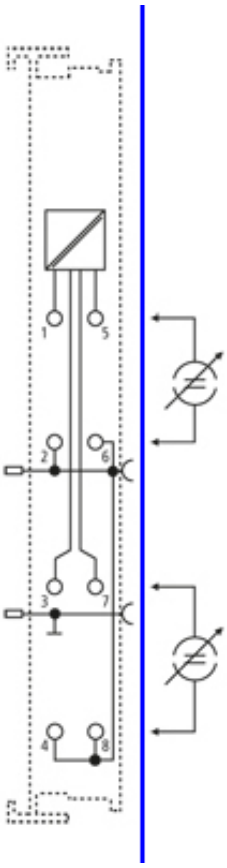

Fig. 27: EL3154/ES3154 - Sensor connection

NOTE	
	Installation, parameterization, programming etc. Further information on installation, parameterization, programming etc. can be found in the respective terminal-specific documentation, which is available for download on https://www.beckhoff.com/en-us/products/i-o/ethercat-terminals.

2.4.7 EL3174-0000

non-hazardous location or classified hazardous location Class I, Div. 2, Groups A, B, C, D or Zone 2, Group IIC	non-hazardous location or classified hazardous location Class I, Div. 2, Groups A, B, C, D Class II, Div. 2, Groups E, F, G or Zone 2, Group IIC Zone 22, Group IIIC

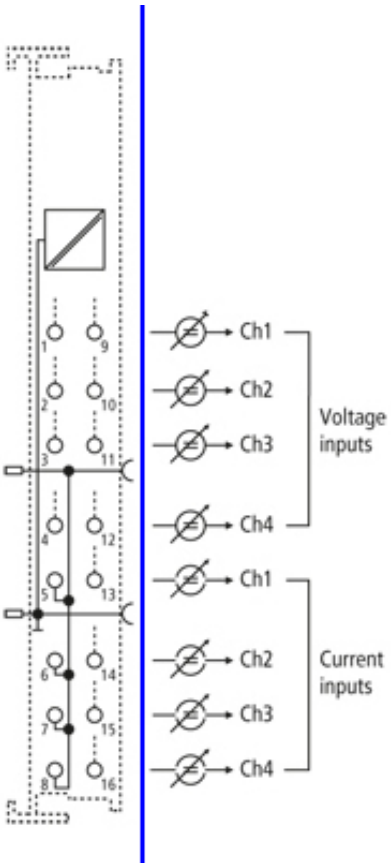

Fig. 28: EL3174-0000 - Sensor connection

NOTE	
	Installation, parameterization, programming etc. Further information on installation, parameterization, programming etc. can be found in the respective terminal-specific documentation, which is available for download on https://www.beckhoff.com/en-us/products/i-o/ethercat-terminals.

2.4.8 EL3174-0002

non-hazardous location	non-hazardous location
or	or
classified hazardous location	classified hazardous location
Class I, Div. 2, Groups A, B, C, D	Class I, Div. 2, Groups A, B, C, D
or	Class II, Div. 2, Groups E, F, G
Zone 2, Group IIC	or
	Zone 2, Group IIC
	Zone 22, Group IIIC

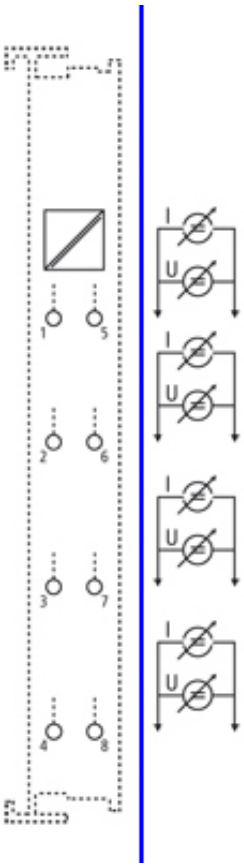

Fig. 29: EL3174-0002 - Sensor connection

NOTE	
	Installation, parameterization, programming etc. Further information on installation, parameterization, programming etc. can be found in the respective terminal-specific documentation, which is available for download on https://www.beckhoff.com/en-us/products/i-o/ethercat-terminals.

2.4.9 EL3174-0032

non-hazardous location or classified hazardous location Class I, Div. 2, Groups A, B, C, D or Zone 2, Group IIC	non-hazardous location or classified hazardous location Class I, Div. 2, Groups A, B, C, D Class II, Div. 2, Groups E, F, G or Zone 2, Group IIC Zone 22, Group IIIC

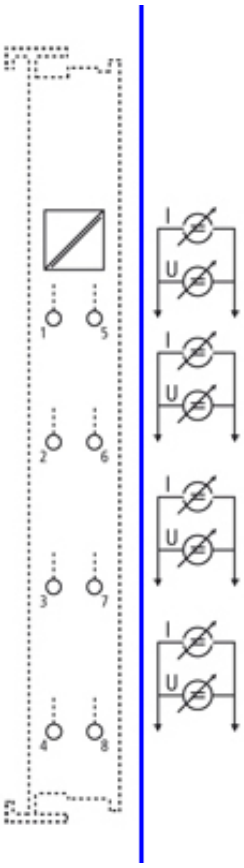

Fig. 30: EL3174-0032 - Sensor connection

NOTE	
	Installation, parameterization, programming etc. Further information on installation, parameterization, programming etc. can be found in the respective terminal-specific documentation, which is available for download on https://www.beckhoff.com/en-us/products/i-o/ethercat-terminals.

2.4.10 EL3182/ES3182

non-hazardous location	non-hazardous location
or	or
classified hazardous location	classified hazardous location
Class I, Div. 2, Groups A, B, C, D	Class I, Div. 2, Groups A, B, C, D
or	Class II, Div. 2, Groups E, F, G
Zone 2, Group IIC	or
	Zone 2, Group IIC
	Zone 22, Group IIIC

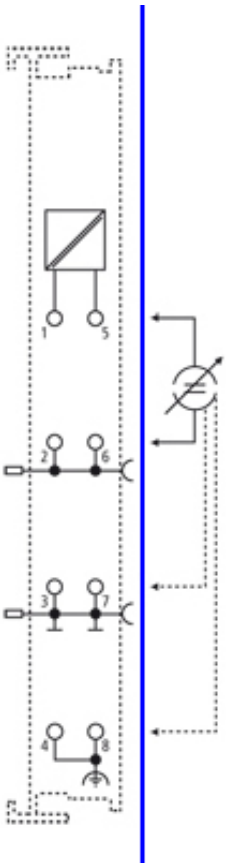

Fig. 31: EL3182/ES3182 - Sensor connection

NOTE	
	Installation, parameterization, programming etc. Further information on installation, parameterization, programming etc. can be found in the respective terminal-specific documentation, which is available for download on https://www.beckhoff.com/en-us/products/i-o/ethercat-terminals.

2.4.11 EL3204/ES3204

non-hazardous location	non-hazardous location
or	or
classified hazardous location	classified hazardous location
Class I, Div. 2, Groups A, B, C, D	Class I, Div. 2, Groups A, B, C, D
or	Class II, Div. 2, Groups E, F, G
Zone 2, Group IIC	or
	Zone 2, Group IIC
	Zone 22, Group IIIC

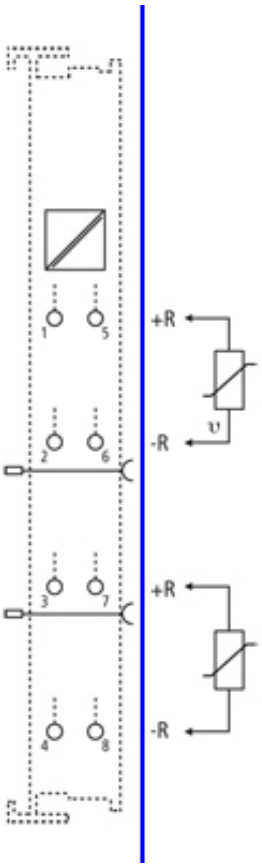

Fig. 32: EL3204/ES3204 - Sensor connection

NOTE	
	Installation, parameterization, programming etc. Further information on installation, parameterization, programming etc. can be found in the respective terminal-specific documentation, which is available for download on https://www.beckhoff.com/en-us/products/i-o/ethercat-terminals.

2.4.12 EL3314

non-hazardous location	non-hazardous location
or	or
classified hazardous location	classified hazardous location
Class I, Div. 2, Groups A, B, C, D	Class I, Div. 2, Groups A, B, C, D
or	Class II, Div. 2, Groups E, F, G
Zone 2, Group IIC	or
	Zone 2, Group IIC
	Zone 22, Group IIIC

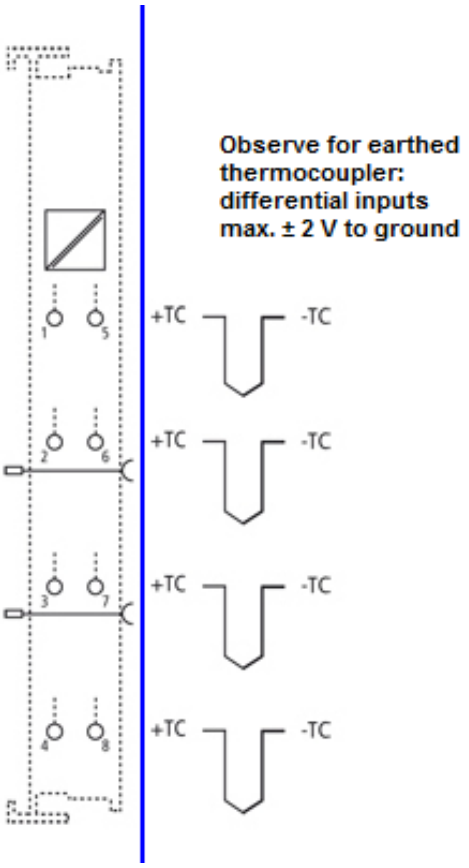

Fig. 33: EL3314 - Sensor connection

NOTE	
	Installation, parameterization, programming etc. Further information on installation, parameterization, programming etc. can be found in the respective terminal-specific documentation, which is available for download on https://www.beckhoff.com/en-us/products/i-o/ethercat-terminals.

2.4.13 EL3318

non-hazardous location	non-hazardous location
or	or
classified hazardous location	classified hazardous location
Class I, Div. 2, Groups A, B, C, D	Class I, Div. 2, Groups A, B, C, D
or	Class II, Div. 2, Groups E, F, G
Zone 2, Group IIC	or
	Zone 2, Group IIC
	Zone 22, Group IIIC

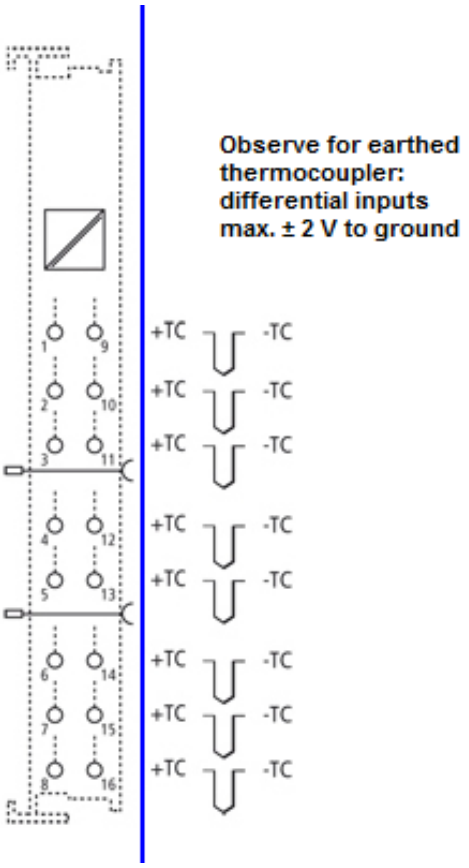

Fig. 34: EL3318 - Sensor connection

NOTE	
	Installation, parameterization, programming etc. Further information on installation, parameterization, programming etc. can be found in the respective terminal-specific documentation, which is available for download on https://www.beckhoff.com/en-us/products/i-o/ethercat-terminals.

2.4.14 EL3356-0010

non-hazardous location or classified hazardous location Class I, Div. 2, Groups A, B, C, D or Zone 2, Group IIC	non-hazardous location or classified hazardous location Class I, Div. 2, Groups A, B, C, D Class II, Div. 2, Groups E, F, G or Zone 2, Group IIC Zone 22, Group IIIC

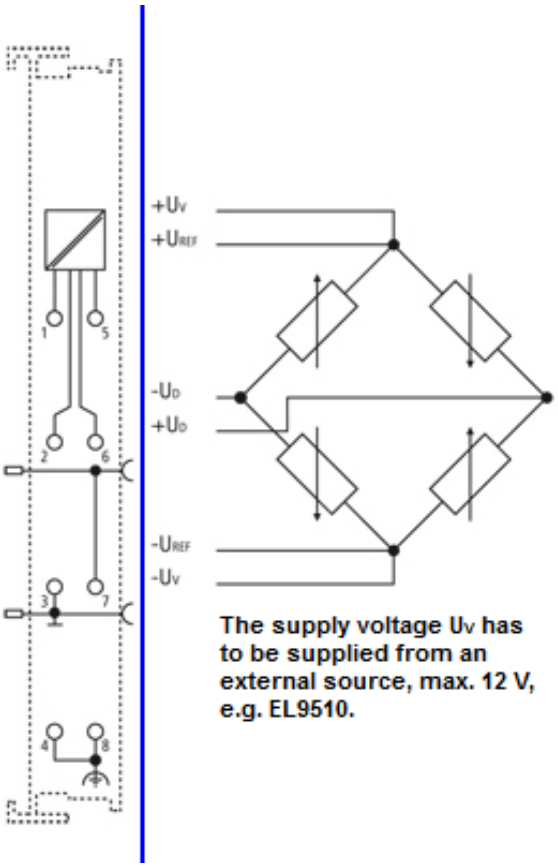

Fig. 35: EL3356-0010 - Sensor connection

NOTE	
	Installation, parameterization, programming etc. Further information on installation, parameterization, programming etc. can be found in the respective terminal-specific documentation, which is available for download on https://www.beckhoff.com/en-us/products/i-o/ethercat-terminals.

2.4.15 EL3702/ES3702

non-hazardous location	non-hazardous location
or	or
classified hazardous location	classified hazardous location
Class I, Div. 2, Groups A, B, C, D	Class I, Div. 2, Groups A, B, C, D
or	Class II, Div. 2, Groups E, F, G
Zone 2, Group IIC	or
	Zone 2, Group IIC
	Zone 22, Group IIIC

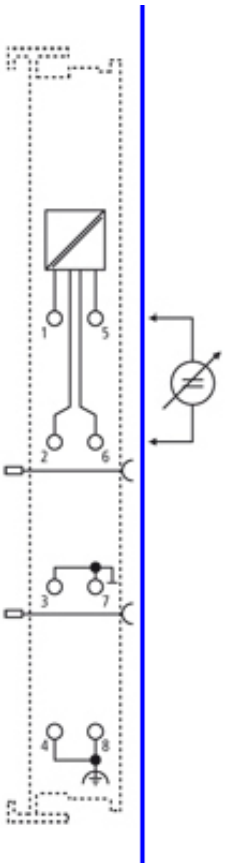

Fig. 36: EL3702/ES3702 - Sensor connection

NOTE

Installation, parameterization, programming etc.

Further information on installation, parameterization, programming etc. can be found in the respective terminal-specific documentation, which is available for download on https://www.beckhoff.com/en-us/products/i-o/ethercat-terminals.

2.5 EtherCAT Terminals with analog outputs

2.5.1 EL4014/ES4014

non-hazardous location or classified hazardous location Class I, Div. 2, Groups A, B, C, D or Zone 2, Group IIC	non-hazardous location or classified hazardous location Class I, Div. 2, Groups A, B, C, D Class II, Div. 2, Groups E, F, G or Zone 2, Group IIC Zone 22, Group IIIC

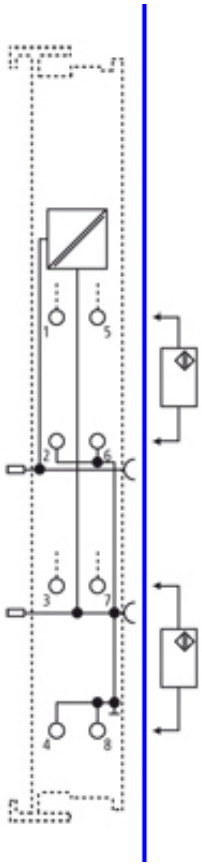

Fig. 37: EL4014/ES4014 - Actuator connection

NOTE	
	Installation, parameterization, programming etc. Further information on installation, parameterization, programming etc. can be found in the respective terminal-specific documentation, which is available for download on https://www.beckhoff.com/en-us/products/i-o/ethercat-terminals.

2.5.2 EL4022/ES4022

non-hazardous location	non-hazardous location
or	or
classified hazardous location	classified hazardous location
Class I, Div. 2, Groups A, B, C, D	Class I, Div. 2, Groups A, B, C, D
or	Class II, Div. 2, Groups E, F, G
Zone 2, Group IIC	or
	Zone 2, Group IIC
	Zone 22, Group IIIC

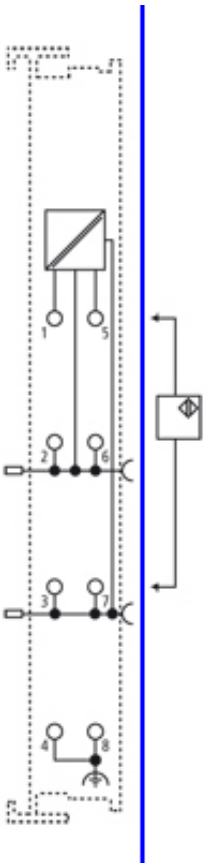

Fig. 38: EL4022/ES4022 - Actuator connection

NOTE

Installation, parameterization, programming etc.

Further information on installation, parameterization, programming etc. can be found in the respective terminal-specific documentation, which is available for download on https://www.beckhoff.com/en-us/products/i-o/ethercat-terminals.

2.5.3 EL4732/ES4732

non-hazardous location	non-hazardous location
or	or
classified hazardous location	classified hazardous location
Class I, Div. 2, Groups A, B, C, D	Class I, Div. 2, Groups A, B, C, D
or	Class II, Div. 2, Groups E, F, G
Zone 2, Group IIC	or
	Zone 2, Group IIC
	Zone 22, Group IIIC

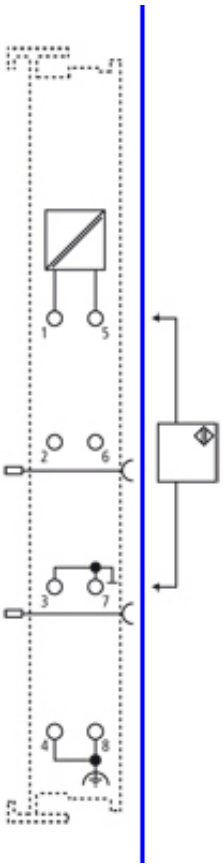

Fig. 39: EL4732/ES4732 - Actuator connection

NOTE

Installation, parameterization, programming etc.

Further information on installation, parameterization, programming etc. can be found in the respective terminal-specific documentation, which is available for download on https://www.beckhoff.com/en-us/products/i-o/ethercat-terminals.

2.6 Further EtherCAT Terminals

2.6.1 EL5152/ES5152

non-hazardous location or classified hazardous location Class I, Div. 2, Groups A, B, C, D or Zone 2, Group IIC	non-hazardous location or classified hazardous location Class I, Div. 2, Groups A, B, C, D Class II, Div. 2, Groups E, F, G or Zone 2, Group IIC Zone 22, Group IIIC

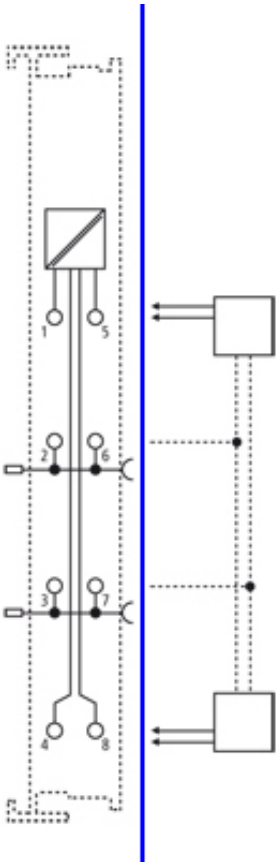

Fig. 40: EL5152/ES5152 - Connection

NOTE	
	Installation, parameterization, programming etc. Further information on installation, parameterization, programming etc. can be found in the respective terminal-specific documentation, which is available for download on https://www.beckhoff.com/en-us/products/i-o/ethercat-terminals.

2.6.2 EL6021-0000

non-hazardous location	non-hazardous location
or	or
classified hazardous location	classified hazardous location
Class I, Div. 2, Groups A, B, C, D	Class I, Div. 2, Groups A, B, C, D
or	Class II, Div. 2, Groups E, F, G
Zone 2, Group IIC	or
	Zone 2, Group IIC
	Zone 22, Group IIIC

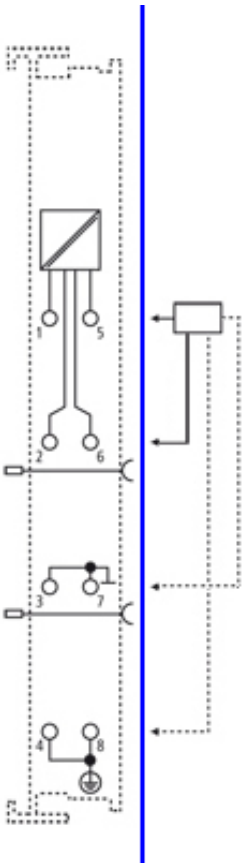

Fig. 41: EL6021-0000 - Connection

NOTE

Installation, parameterization, programming etc.

Further information on installation, parameterization, programming etc. can be found in the respective terminal-specific documentation, which is available for download on https://www.beckhoff.com/en-us/products/i-o/ethercat-terminals.

2.6.3 EL6021-1001

non-hazardous location	non-hazardous location
or	or
classified hazardous location	classified hazardous location
Class I, Div. 2, Groups A, B, C, D	Class I, Div. 2, Groups A, B, C, D
or	Class II, Div. 2, Groups E, F, G
Zone 2, Group IIC	or
	Zone 2, Group IIC
	Zone 22, Group IIIC

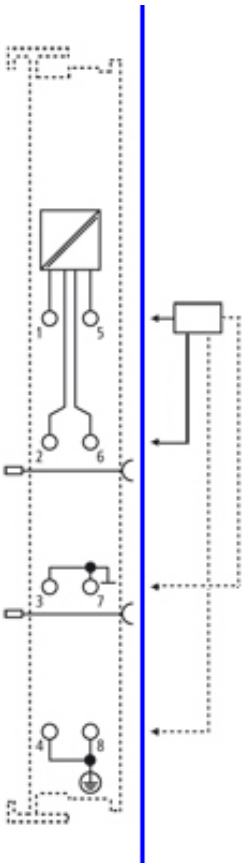

Fig. 42: EL6021-1001 - Connection

NOTE	
	Installation, parameterization, programming etc. Further information on installation, parameterization, programming etc. can be found in the respective terminal-specific documentation, which is available for download on https://www.beckhoff.com/en-us/products/i-o/ethercat-terminals.

2.6.4 EL6070

non-hazardous location

or

classified hazardous location

Class I, Div. 2, Groups A, B, C, D

or

Zone 2, Group IIC

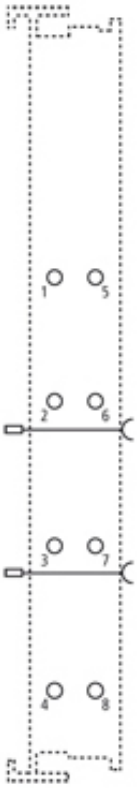

Fig. 43: EL6070 - Connection

NOTE	
	Installation, parameterization, programming etc. Further information on installation, parameterization, programming etc. can be found in the respective terminal-specific documentation, which is available for download on https://www.beckhoff.com/en-us/products/i-o/ethercat-terminals.

2.6.5 EL6601

non-hazardous location
or
classified hazardous location
Class I, Div. 2, Groups A, B, C, D
or
Zone 2, Group IIC

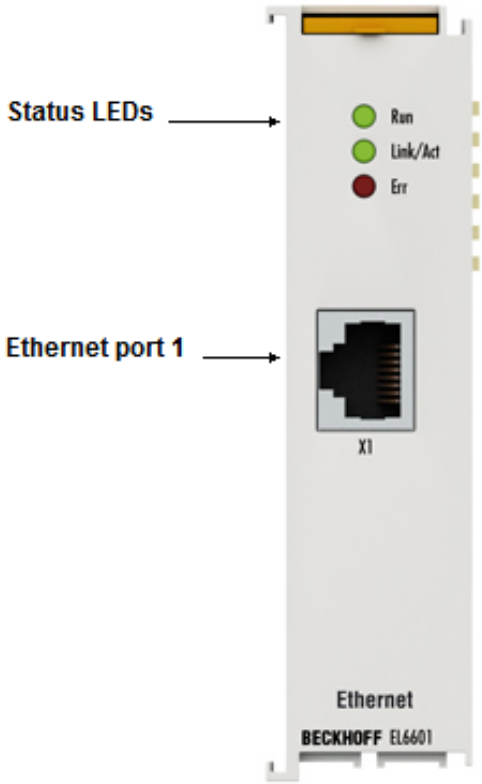

Fig. 44: EL6601 - Connection

NOTE	
	Installation, parameterization, programming etc. Further information on installation, parameterization, programming etc. can be found in the respective terminal-specific documentation, which is available for download on https://www.beckhoff.com/en-us/products/i-o/ethercat-terminals.

2.6.6 EL9550/ES9550

non-hazardous location

or

classified hazardous location

Class I, Div. 2, Groups A, B, C, D

or

Zone 2, Group IIC

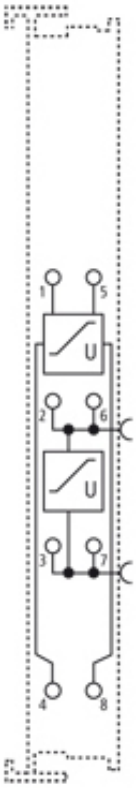

Fig. 45: EL9550/ES9550 - Connection

NOTE	
	Installation, parameterization, programming etc. Further information on installation, parameterization, programming etc. can be found in the respective terminal-specific documentation, which is available for download on https://www.beckhoff.com/en-us/products/i-o/ethercat-terminals.

2.7 Bus Coupler

2.7.1 BK3120

non-hazardous location
or
classified hazardous location
Class I, Div. 2, Groups A, B, C, D
or
Zone 2, Group IIC

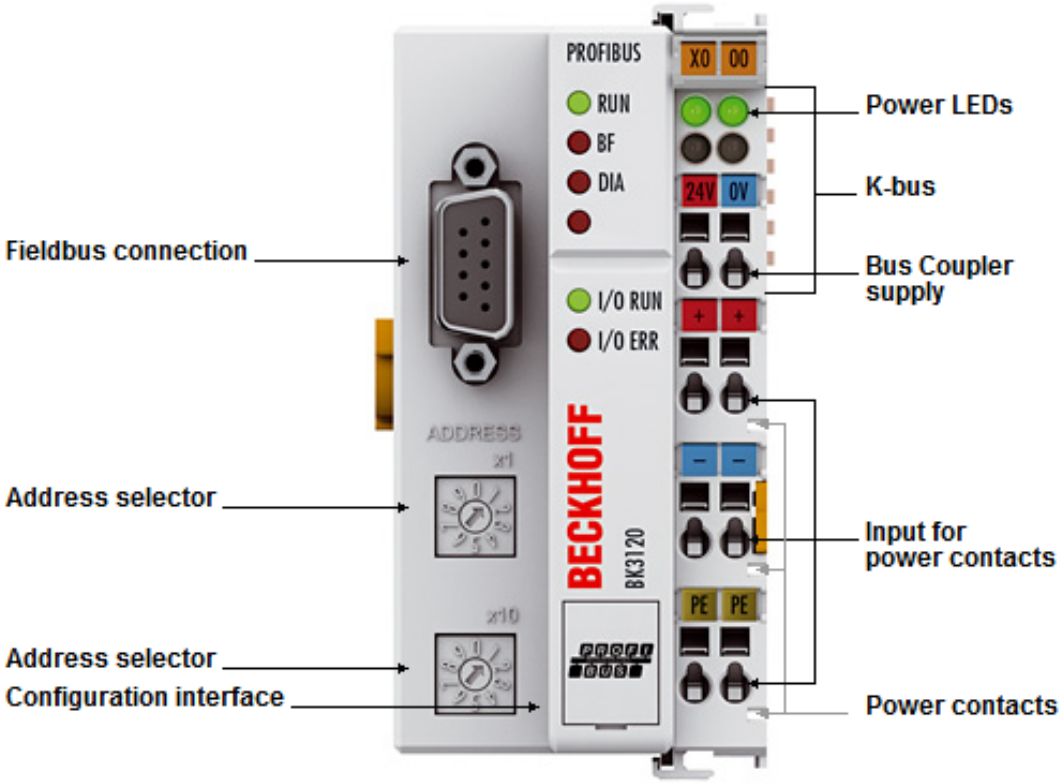

Fig. 46: BK3120 - Connection

NOTE	
	Installation, parameterization, programming etc. Further information on installation, parameterization, programming etc. can be found in the respective terminal-specific documentation, which is available for download on https://www.beckhoff.com/en-us/products/i-o/bus-terminals.

2.8 Bus Terminals

2.8.1 KL1352/KS1352

non-hazardous location	non-hazardous location
or	or
classified hazardous location	classified hazardous location
Class I, Div. 2, Groups A, B, C, D	Class I, Div. 2, Groups A, B, C, D
or	Class II, Div. 2, Groups E, F, G
Zone 2, Group IIC	or
	Zone 2, Group IIC
	Zone 22, Group IIIC

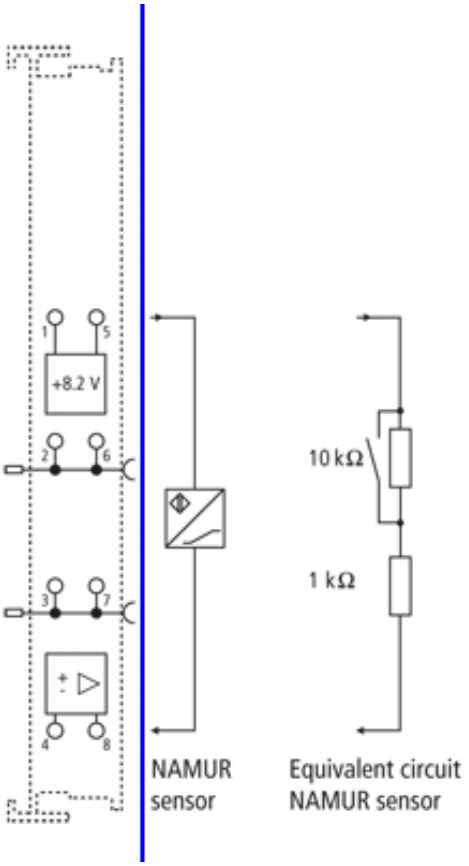

Fig. 47: KL1352/KS1352 - Sensor connection

NOTE	
	Installation, parameterization, programming etc. Further information on installation, parameterization, programming etc. can be found in the respective terminal-specific documentation, which is available for download on https://www.beckhoff.com/en-us/products/i-o/bus-terminals.

2.8.2 KL1501/KS1501

non-hazardous location	non-hazardous location
or	or
classified hazardous location	classified hazardous location
Class I, Div. 2, Groups A, B, C, D	Class I, Div. 2, Groups A, B, C, D
or	Class II, Div. 2, Groups E, F, G
Zone 2, Group IIC	or
	Zone 2, Group IIC
	Zone 22, Group IIIC

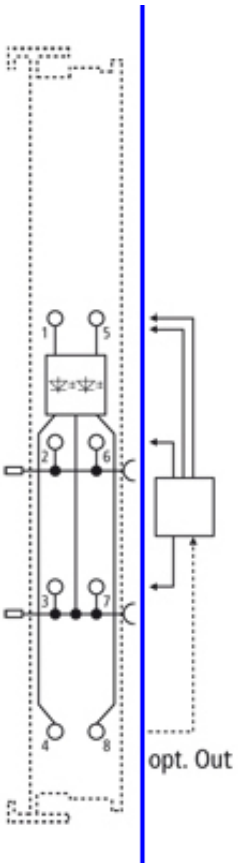

Fig. 48: KL1501/KS1501 - Sensor connection

NOTE

Installation, parameterization, programming etc.

Further information on installation, parameterization, programming etc. can be found in the respective terminal-specific documentation, which is available for download on https://www.beckhoff.com/en-us/products/i-o/bus-terminals.

2.8.3 KL2408/KS2408

non-hazardous location	non-hazardous location
or	or
classified hazardous location	classified hazardous location
Class I, Div. 2, Groups A, B, C, D	Class I, Div. 2, Groups A, B, C, D
or	Class II, Div. 2, Groups E, F, G
Zone 2, Group IIC	or
	Zone 2, Group IIC
	Zone 22, Group IIIC

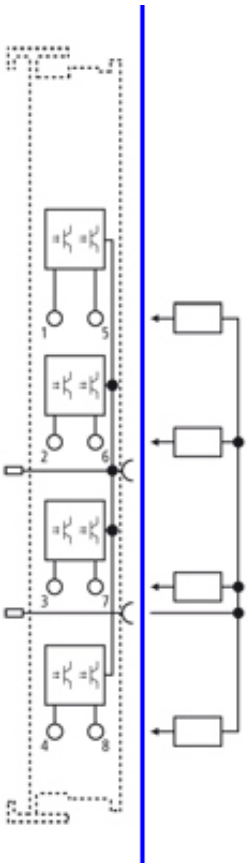

Fig. 49: KL2408/KS2408 - Actuator connection

NOTE

Installation, parameterization, programming etc.

Further information on installation, parameterization, programming etc. can be found in the respective terminal-specific documentation, which is available for download on https://www.beckhoff.com/en-us/products/i-o/bus-terminals.

2.8.4 KL2502/KS2502

non-hazardous location	non-hazardous location
or	or
classified hazardous location	classified hazardous location
Class I, Div. 2, Groups A, B, C, D	Class I, Div. 2, Groups A, B, C, D
or	Class II, Div. 2, Groups E, F, G
Zone 2, Group IIC	or
	Zone 2, Group IIC
	Zone 22, Group IIIC

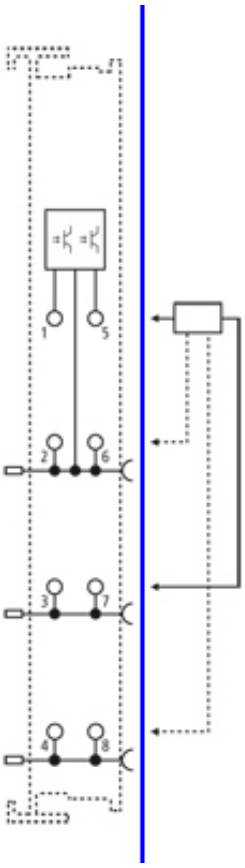

Fig. 50: KL2502/KS2502 - Actuator connection

NOTE

Installation, parameterization, programming etc.

Further information on installation, parameterization, programming etc. can be found in the respective terminal-specific documentation, which is available for download on https://www.beckhoff.com/en-us/products/i-o/bus-terminals.

2.8.5 KL3012/KS3012

non-hazardous location or classified hazardous location Class I, Div. 2, Groups A, B, C, D or Zone 2, Group IIC	non-hazardous location or classified hazardous location Class I, Div. 2, Groups A, B, C, D Class II, Div. 2, Groups E, F, G or Zone 2, Group IIC Zone 22, Group IIIC

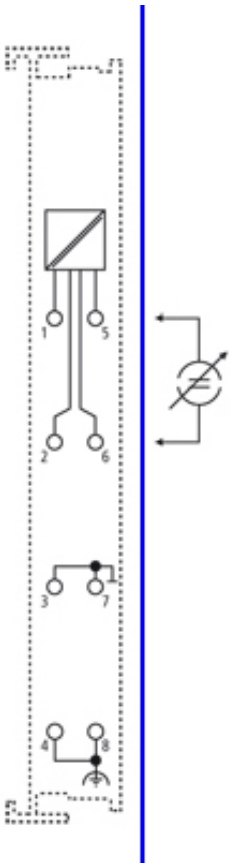

Fig. 51: KL3012/KS3012 - Sensor connection

NOTE

Installation, parameterization, programming etc.

Further information on installation, parameterization, programming etc. can be found in the respective terminal-specific documentation, which is available for download on https://www.beckhoff.com/en-us/products/i-o/bus-terminals.

2.8.6 KL3054/KS3054

non-hazardous location	non-hazardous location
or	or
classified hazardous location	classified hazardous location
Class I, Div. 2, Groups A, B, C, D	Class I, Div. 2, Groups A, B, C, D
or	Class II, Div. 2, Groups E, F, G
Zone 2, Group IIC	or
	Zone 2, Group IIC
	Zone 22, Group IIIC

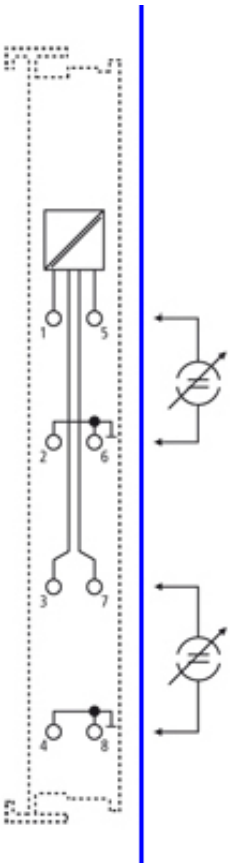

Fig. 52: KL3054/KS3054 - Sensor connection

NOTE

Installation, parameterization, programming etc.

Further information on installation, parameterization, programming etc. can be found in the respective terminal-specific documentation, which is available for download on https://www.beckhoff.com/en-us/products/i-o/bus-terminals.

2.8.7 KL4424/KS4424

non-hazardous location	non-hazardous location
or	or
classified hazardous location	classified hazardous location
Class I, Div. 2, Groups A, B, C, D	Class I, Div. 2, Groups A, B, C, D
or	Class II, Div. 2, Groups E, F, G
Zone 2, Group IIC	or
	Zone 2, Group IIC
	Zone 22, Group IIIC

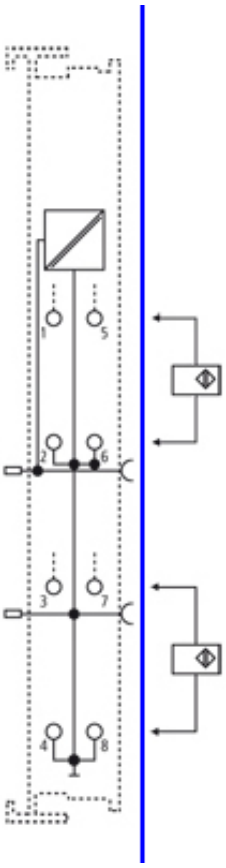

Fig. 53: KL4424/KS4424 - Actuator connection

NOTE

Installation, parameterization, programming etc.

Further information on installation, parameterization, programming etc. can be found in the respective terminal-specific documentation, which is available for download on https://www.beckhoff.com/en-us/products/i-o/bus-terminals.

2.8.8 KL9010

non-hazardous location
or
classified hazardous location
Class I, Div. 2, Groups A, B, C, D
or
Zone 2, Group IIC

Fig. 54: KL9010 - Connection

NOTE	
	Installation, parameterization, programming etc. Further information on installation, parameterization, programming etc. can be found in the respective terminal-specific documentation, which is available for download on https://www.beckhoff.com/en-us/products/i-o/bus-terminals.

2.8.9 KL9110/KS9110

non-hazardous location

or

classified hazardous location

Class I, Div. 2, Groups A, B, C, D

or

Zone 2, Group IIC

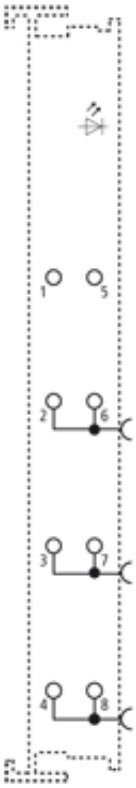

Fig. 55: KL9110/KS9110 - Connection

NOTE	
	Installation, parameterization, programming etc. Further information on installation, parameterization, programming etc. can be found in the respective terminal-specific documentation, which is available for download on https://www.beckhoff.com/en-us/products/i-o/bus-terminals.

2.9 Embedded PCs

2.9.1 CX5120

non-hazardous location

or

classified hazardous location

Class I, Div. 2, Groups A, B, C, D

or

Zone 2, Group IIC

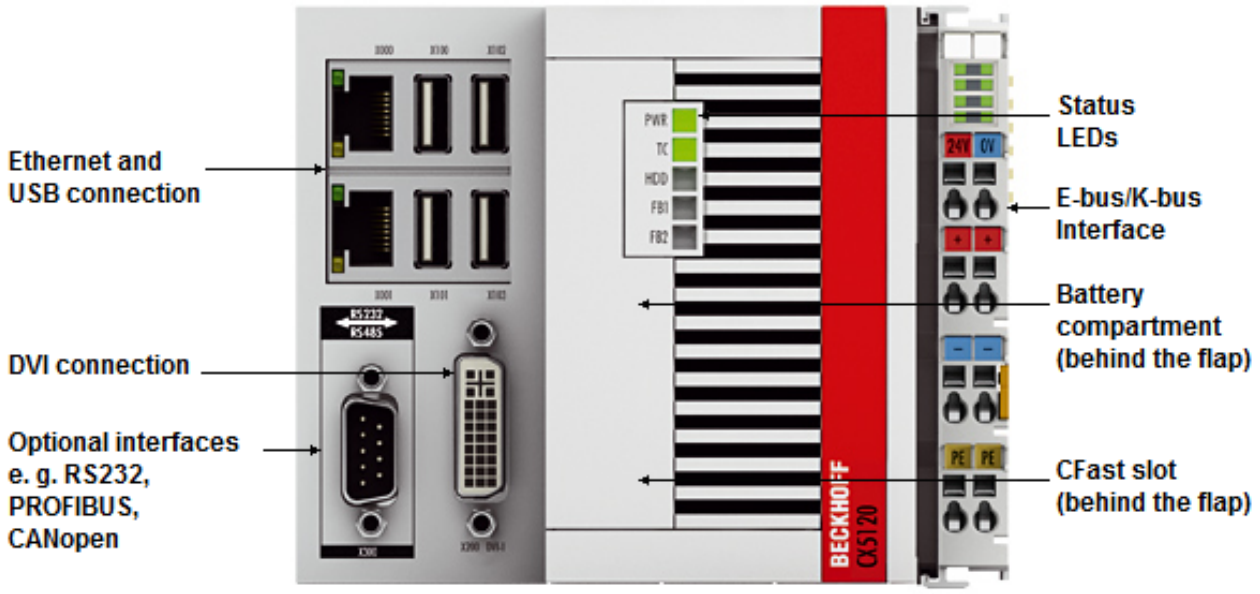

Fig. 56: CX5120 - Connection

NOTE	
	Installation, parameterization, programming etc. Further information on installation, parameterization, programming etc. can be found in the respective Embedded-PC-specific documentation, which is available for download on https://www.beckhoff.com/en-us/products/ipc/embedded-pcs.

2.9.2 CX5130

non-hazardous location

or

classified hazardous location

Class I, Div. 2, Groups A, B, C, D

or

Zone 2, Group IIC

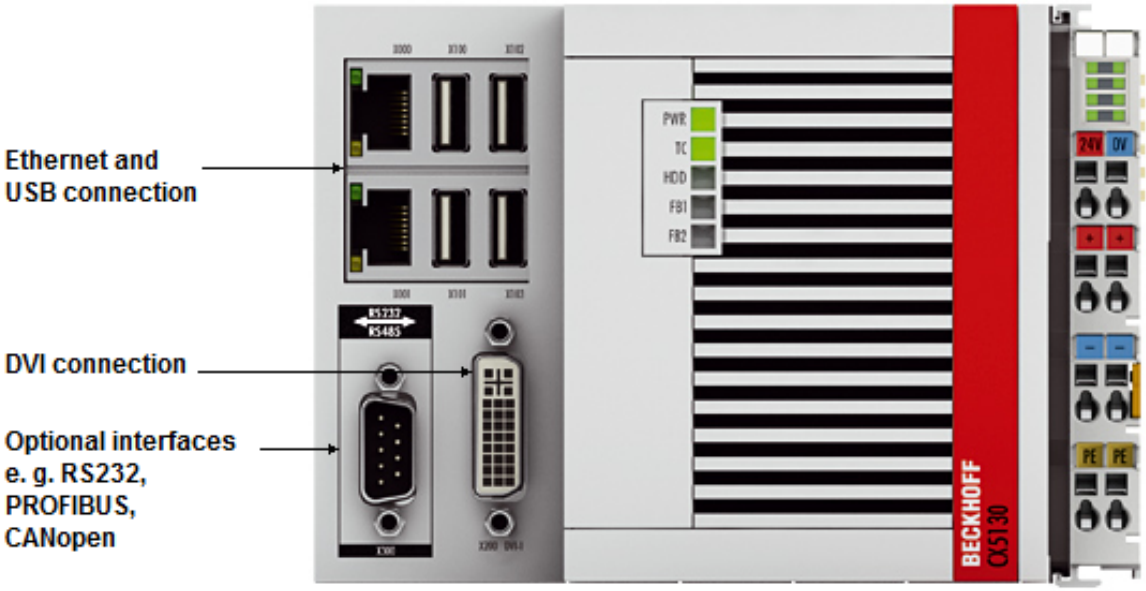

Fig. 57: CX5130 - Connection

NOTE	
	Installation, parameterization, programming etc. Further information on installation, parameterization, programming etc. can be found in the respective Embedded-PC-specific documentation, which is available for download on https://www.beckhoff.com/en-us/products/ipc/embedded-pcs.

2.9.3 CX5140

non-hazardous location

or

classified hazardous location

Class I, Div. 2, Groups A, B, C, D

or

Zone 2, Group IIC

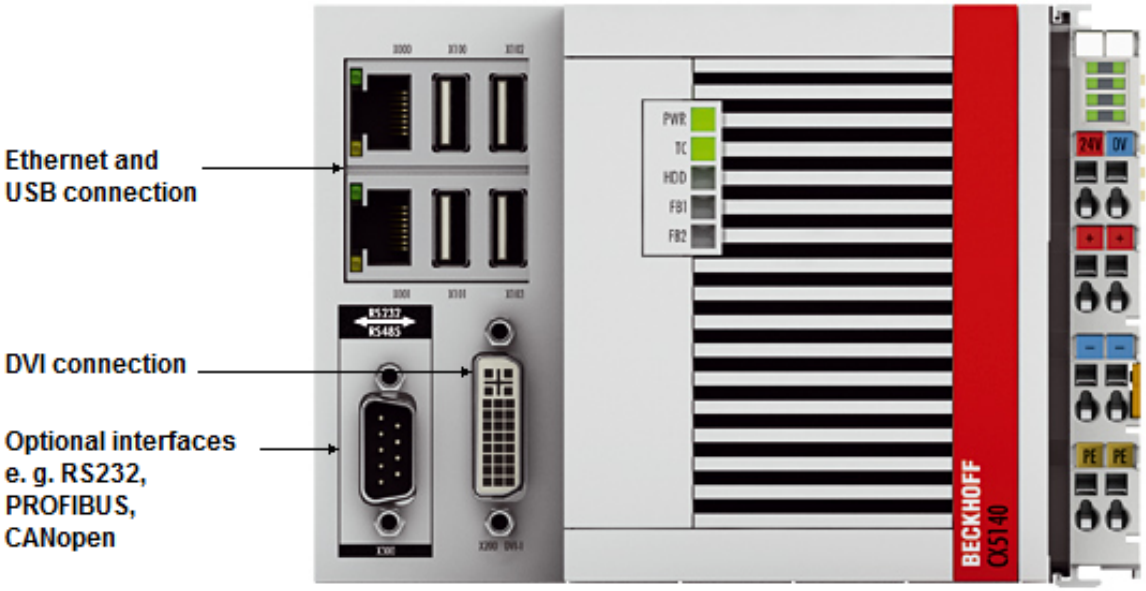

Fig. 58: CX5140 - Connection

NOTE	
	Installation, parameterization, programming etc. Further information on installation, parameterization, programming etc. can be found in the respective Embedded-PC-specific documentation, which is available for download on https://www.beckhoff.com/en-us/products/ipc/embedded-pcs.

2.9.4 CX8010

non-hazardous location
or
classified hazardous location
Class I, Div. 2, Groups A, B, C, D
or
Zone 2, Group IIC

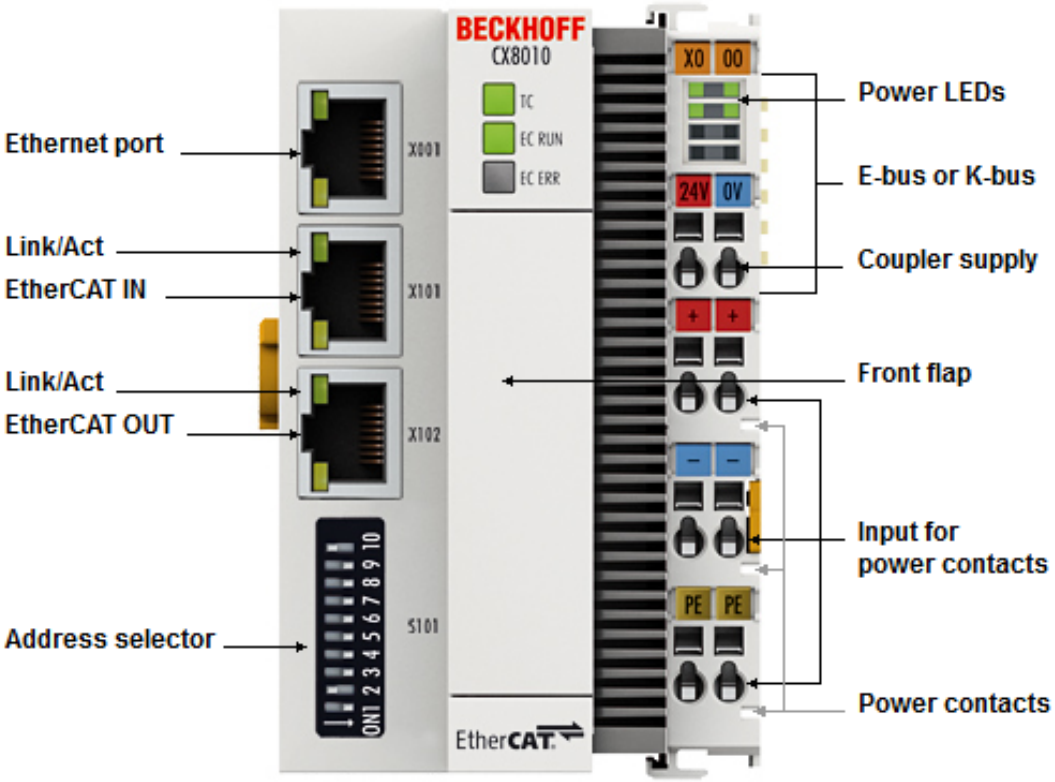

Fig. 59: CX8010 - Connection

NOTE	
	Installation, parameterization, programming etc. Further information on installation, parameterization, programming etc. can be found in the respective Embedded-PC-specific documentation, which is available for download on https://www.beckhoff.com/en-us/products/ipc/embedded-pcs.

2.9.5 CX8030

non-hazardous location
or
classified hazardous location
Class I, Div. 2, Groups A, B, C, D
or
Zone 2, Group IIC

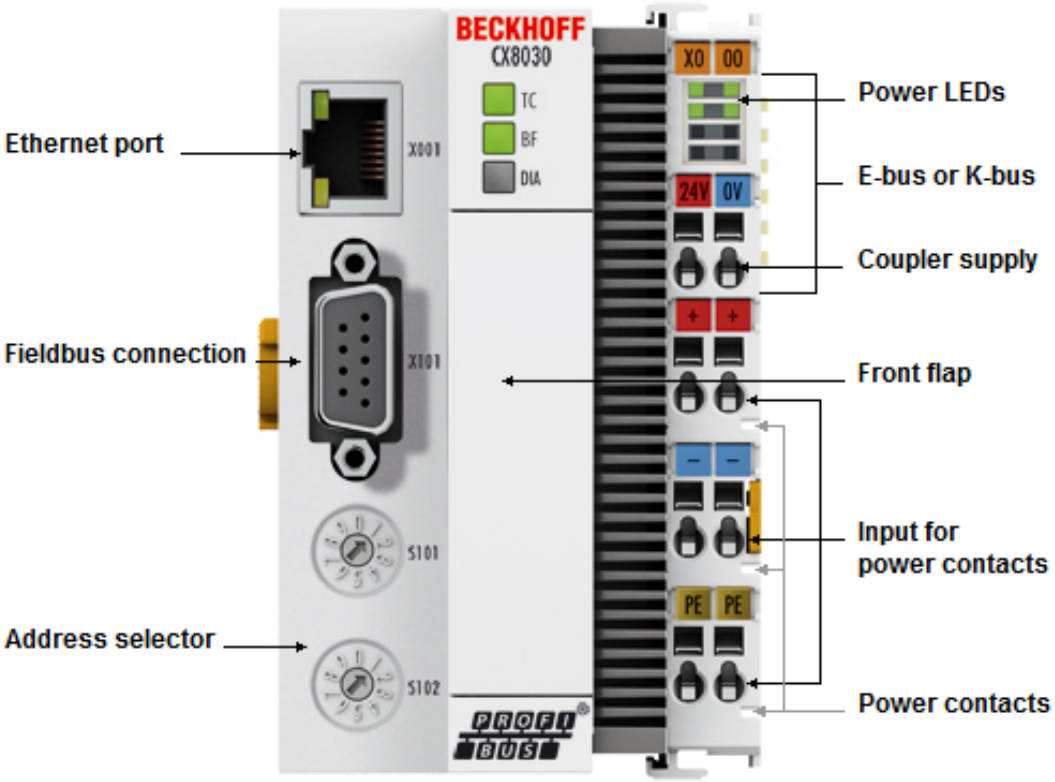

Fig. 60: CX8030 - Connection

NOTE	
	Installation, parameterization, programming etc. Further information on installation, parameterization, programming etc. can be found in the respective Embedded-PC-specific documentation, which is available for download on https://www.beckhoff.com/en-us/products/ipc/embedded-pcs.

2.9.6 CX8031

non-hazardous location
or
classified hazardous location
Class I, Div. 2, Groups A, B, C, D
or
Zone 2, Group IIC

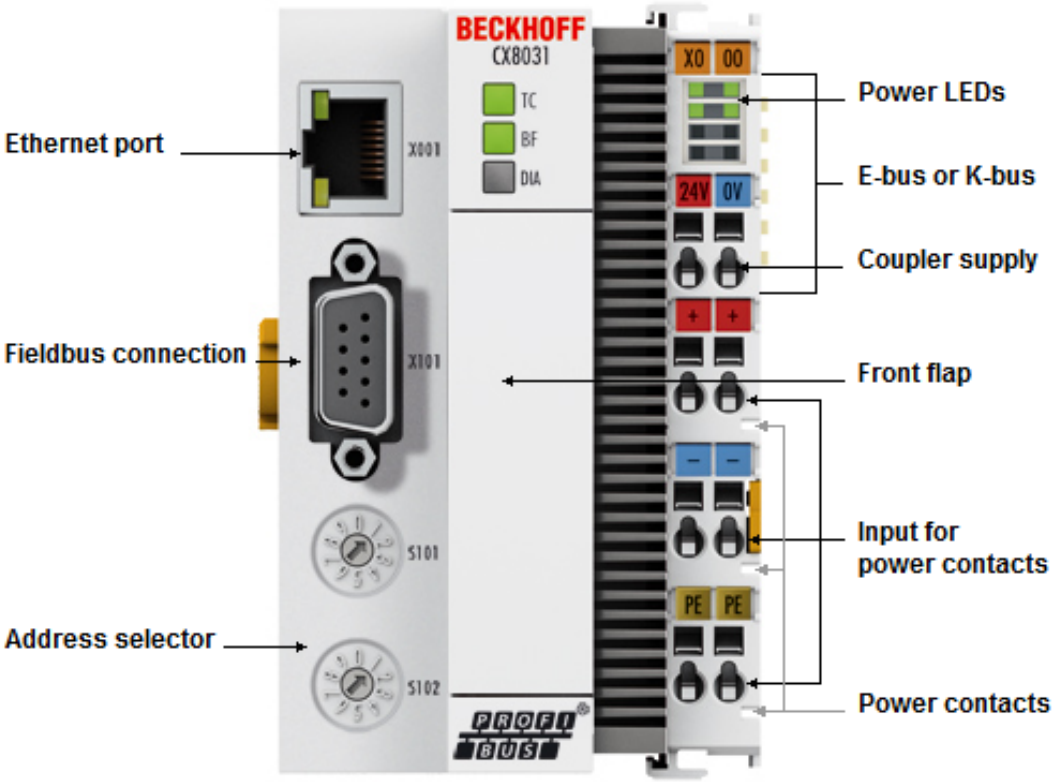

Fig. 61: CX8031 - Connection

NOTE	
	Installation, parameterization, programming etc. Further information on installation, parameterization, programming etc. can be found in the respective Embedded-PC-specific documentation, which is available for download on https://www.beckhoff.com/en-us/products/ipc/embedded-pcs.

2.9.7 CX8050

non-hazardous location
or
classified hazardous location
Class I, Div. 2, Groups A, B, C, D
or
Zone 2, Group IIC

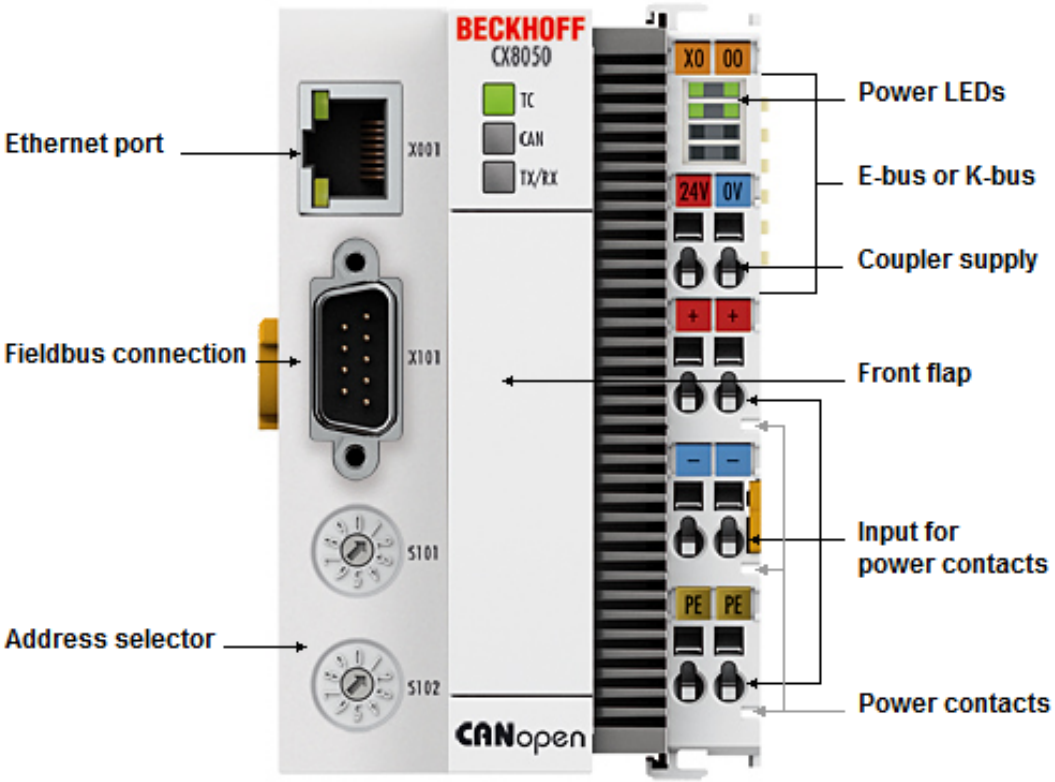

Fig. 62: CX8050 - Connection

NOTE	
	Installation, parameterization, programming etc. Further information on installation, parameterization, programming etc. can be found in the respective Embedded-PC-specific documentation, which is available for download on https://www.beckhoff.com/en-us/products/ipc/embedded-pcs.

2.9.8 CX8051

non-hazardous location
or
classified hazardous location
Class I, Div. 2, Groups A, B, C, D
or
Zone 2, Group IIC

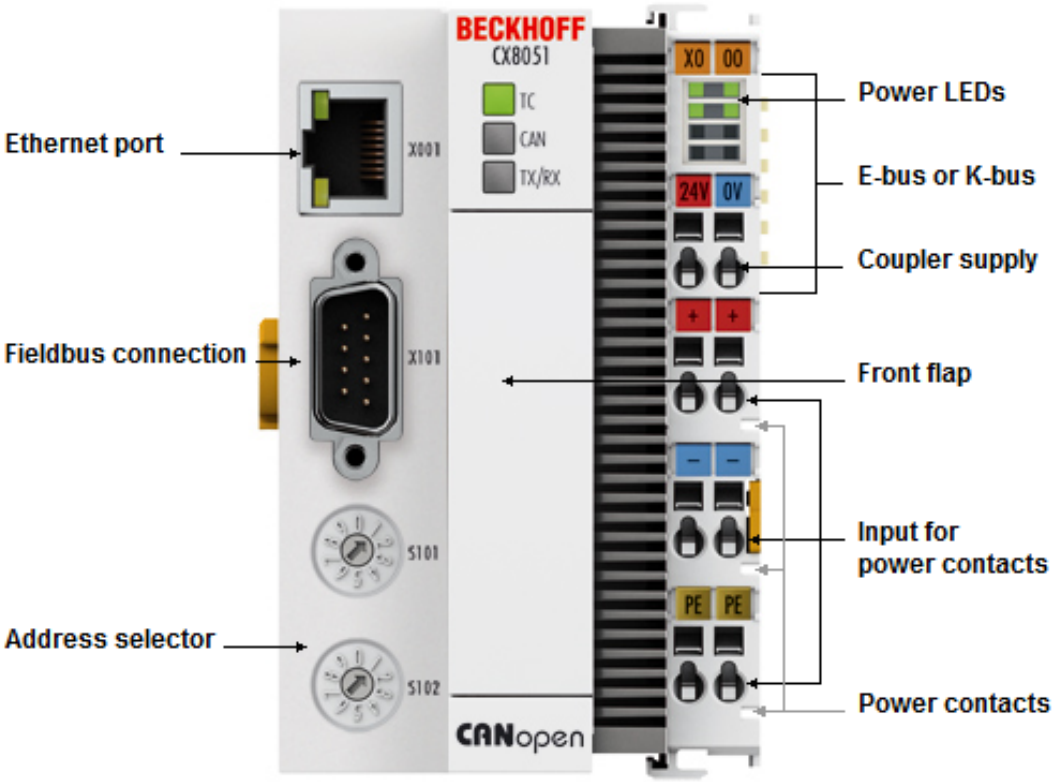

Fig. 63: CX8051 - Connection

NOTE	
	Installation, parameterization, programming etc. Further information on installation, parameterization, programming etc. can be found in the respective Embedded-PC-specific documentation, which is available for download on https://www.beckhoff.com/en-us/products/ipc/embedded-pcs.

2.9.9 CX8080

non-hazardous location

or

classified hazardous location

Class I, Div. 2, Groups A, B, C, D

or

Zone 2, Group IIC

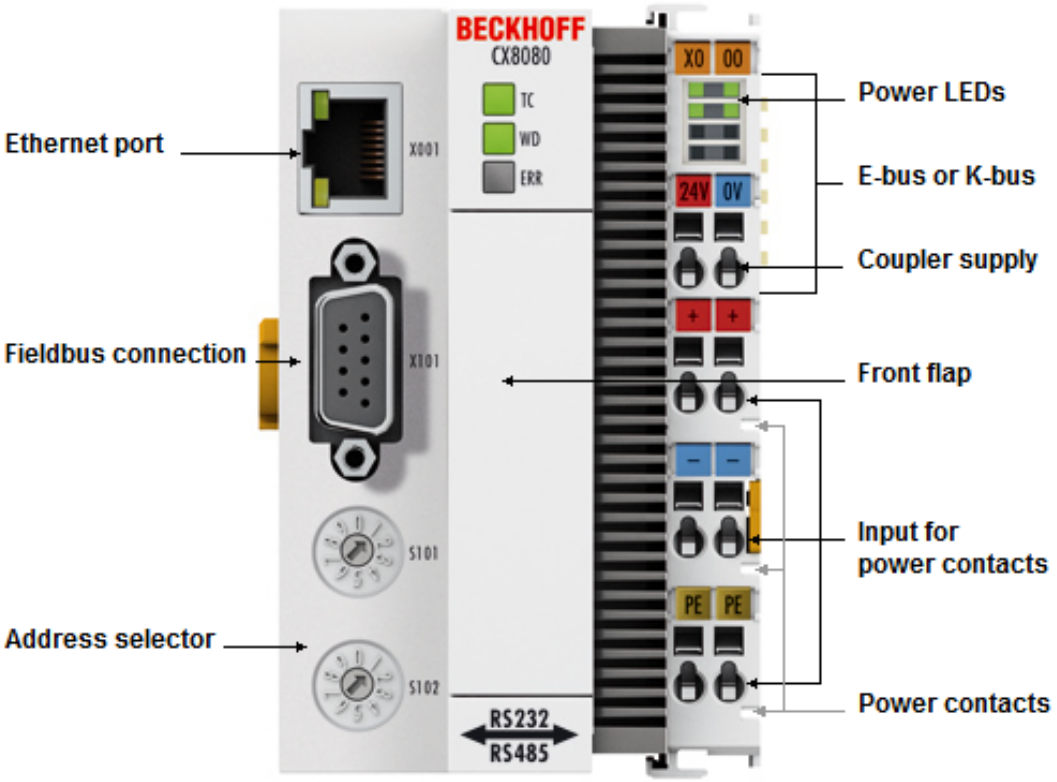

Fig. 64: CX8080 - Connection

NOTE	
	Installation, parameterization, programming etc. Further information on installation, parameterization, programming etc. can be found in the respective Embedded-PC-specific documentation, which is available for download on https://www.beckhoff.com/en-us/products/ipc/embedded-pcs.

2.9.10 CX8090

non-hazardous location

or

classified hazardous location

Class I, Div. 2, Groups A, B, C, D

or

Zone 2, Group IIC

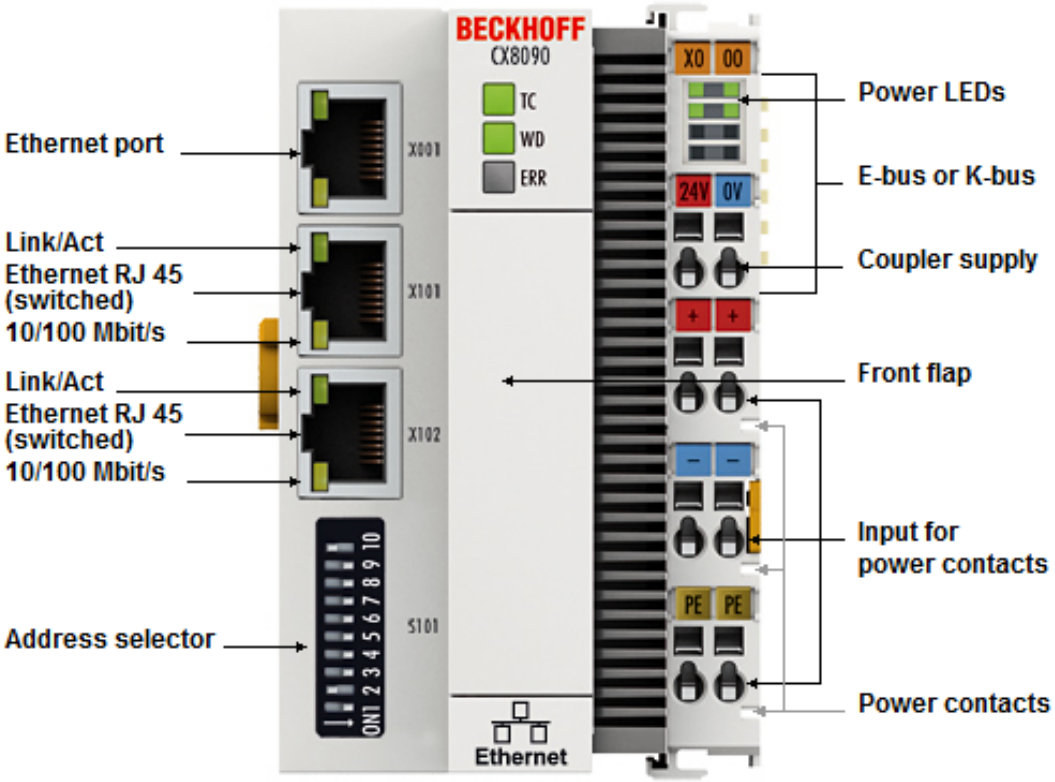

Fig. 65: CX8090 - Connection

NOTE	
	Installation, parameterization, programming etc. Further information on installation, parameterization, programming etc. can be found in the respective Embedded-PC-specific documentation, which is available for download on https://www.beckhoff.com/en-us/products/ipc/embedded-pcs.

2.9.11 CX8091

non-hazardous location

or

classified hazardous location

Class I, Div. 2, Groups A, B, C, D

or

Zone 2, Group IIC

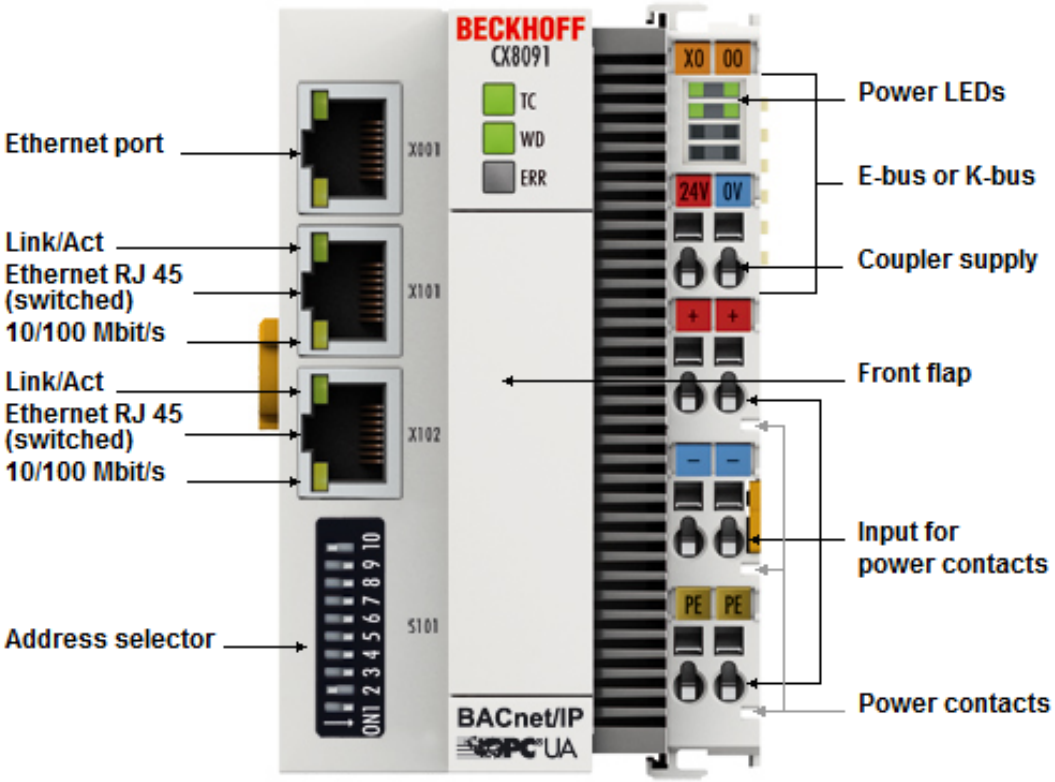

Fig. 66: CX8091 - Connection

NOTE	
	Installation, parameterization, programming etc. Further information on installation, parameterization, programming etc. can be found in the respective Embedded-PC-specific documentation, which is available for download on https://www.beckhoff.com/en-us/products/ipc/embedded-pcs.

2.9.12 CX8093

non-hazardous location

or

classified hazardous location

Class I, Div. 2, Groups A, B, C, D

or

Zone 2, Group IIC

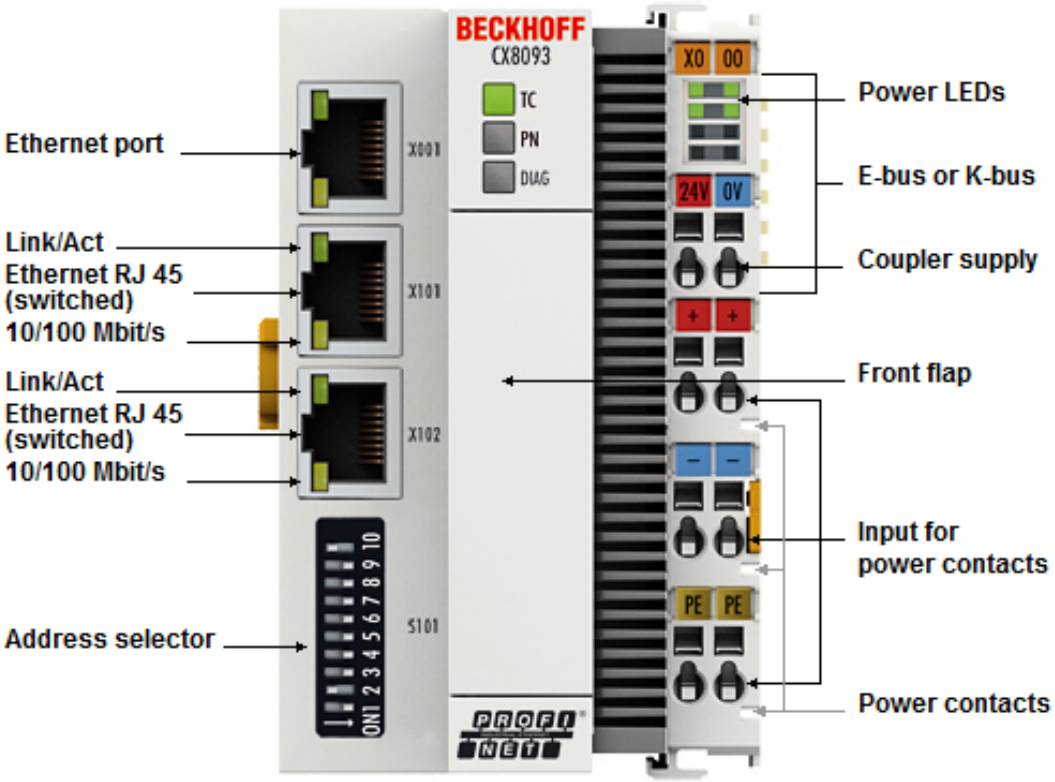

Fig. 67: CX8093 - Connection

NOTE	
	Installation, parameterization, programming etc. Further information on installation, parameterization, programming etc. can be found in the respective Embedded-PC-specific documentation, which is available for download on https://www.beckhoff.com/en-us/products/ipc/embedded-pcs.

2.9.13 CX8095

non-hazardous location

or

classified hazardous location

Class I, Div. 2, Groups A, B, C, D

or

Zone 2, Group IIC

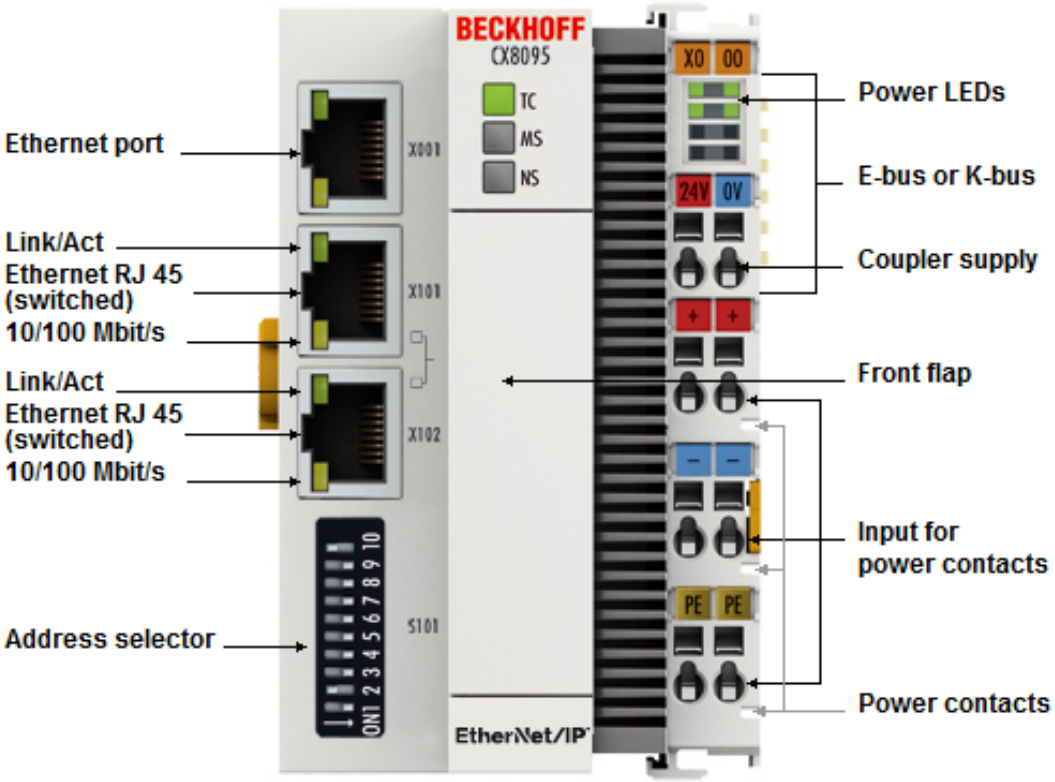

Fig. 68: CX8095 - Connection

NOTE	
	Installation, parameterization, programming etc. Further information on installation, parameterization, programming etc. can be found in the respective Embedded-PC-specific documentation, which is available for download on https://www.beckhoff.com/en-us/products/ipc/embedded-pcs.

2.9.14 CX9020

non-hazardous location
or
classified hazardous location
Class I, Div. 2, Groups A, B, C, D
or
Zone 2, Group IIC

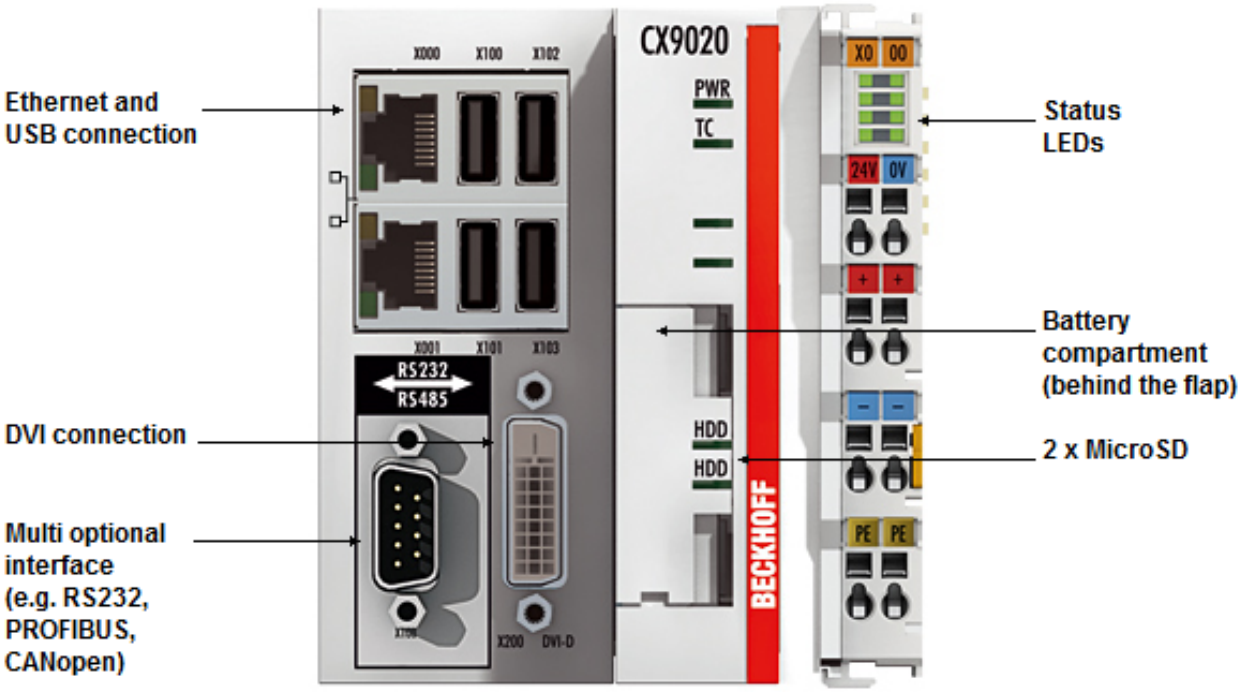

Fig. 69: CX9020 - Connection

NOTE	
	Installation, parameterization, programming etc. Further information on installation, parameterization, programming etc. can be found in the respective Embedded-PC-specific documentation, which is available for download on https://www.beckhoff.com/en-us/products/ipc/embedded-pcs.

2.10 Control Panels and Panel PCs

2.10.1 CPX27xx

non-hazardous location
or
classified hazardous location
Class I, Div. 2, Groups A, B, C, D
Class II, Div. 2, Groups F, G
Class III, Div. 2
or
Zone 2, Group IIC
Zone 22, Group IIIB

Fig. 70: CPX27xx

NOTE	
	Installation, parameterization, programming etc. Further information on installation, parameterization, programming etc. can be found in the respective Embedded-PC-specific documentation, which is available for download on https://www.beckhoff.com/cpx.

2.10.2 CPX29xx

non-hazardous location
or
classified hazardous location
Class I, Div. 2, Groups A, B, C, D
Class II, Div. 2, Groups F, G
Class III, Div. 2
or
Zone 2, Group IIC
Zone 22, Group IIIB

Fig. 71: CPX29xx

NOTE	
	Installation, parameterization, programming etc. Further information on installation, parameterization, programming etc. can be found in the respective Embedded-PC-specific documentation, which is available for download on https://www.beckhoff.com/cpx.

2.10.3 CPX37xx

non-hazardous location
or
classified hazardous location
Class I, Div. 2, Groups A, B, C, D
Class II, Div. 2, Groups F, G
Class III, Div. 2
or
Zone 2, Group IIC
Zone 22, Group IIIB

Fig. 72: CPX37xx

NOTE	
	Installation, parameterization, programming etc. Further information on installation, parameterization, programming etc. can be found in the respective Embedded-PC-specific documentation, which is available for download on https://www.beckhoff.com/cpx.

2.10.4 CPX39xx

non-hazardous location
or
classified hazardous location
Class I, Div. 2, Groups A, B, C, D
Class II, Div. 2, Groups F, G
Class III, Div. 2
or
Zone 2, Group IIC
Zone 22, Group IIIB

Fig. 73: CPX39xx

NOTE	
	Installation, parameterization, programming etc. Further information on installation, parameterization, programming etc. can be found in the respective Embedded-PC-specific documentation, which is available for download on https://www.beckhoff.com/cpx.

3 Ex markings

3.1 Ex marking on coupler housings

(EK, BK)

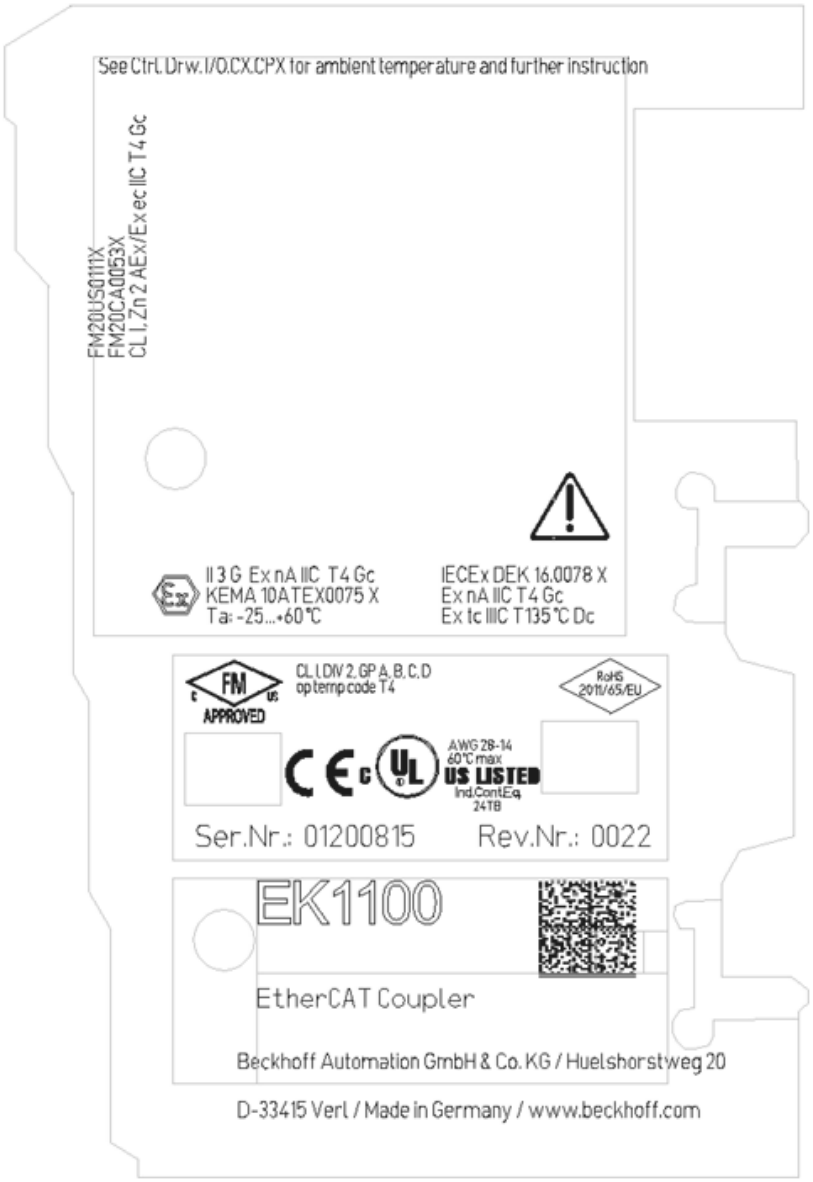

Fig. 74: EK1100 with Ex marking

3.2 Ex marking on terminal housings

(EL, ES, KL, KS)

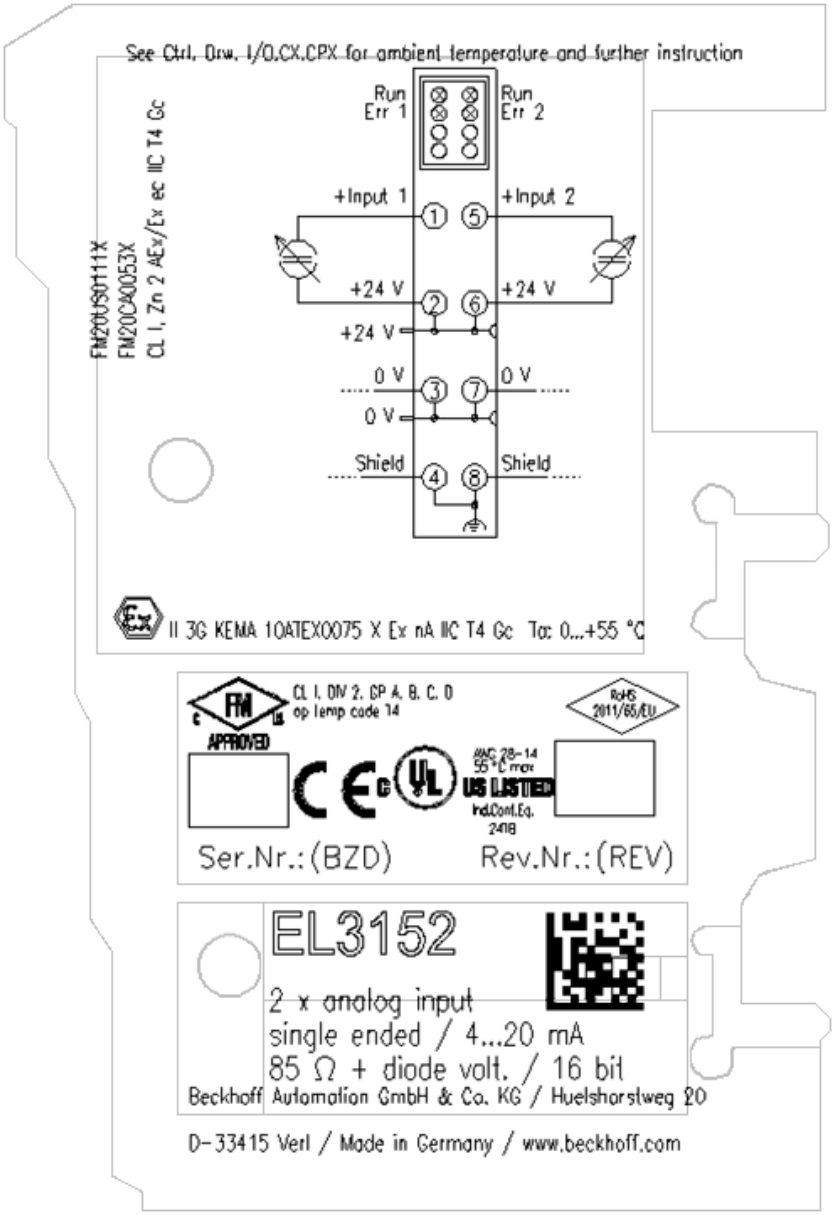

Fig. 75: EL3152 with Ex marking

3.3 Ex marking on HD housings

(EL, KL)

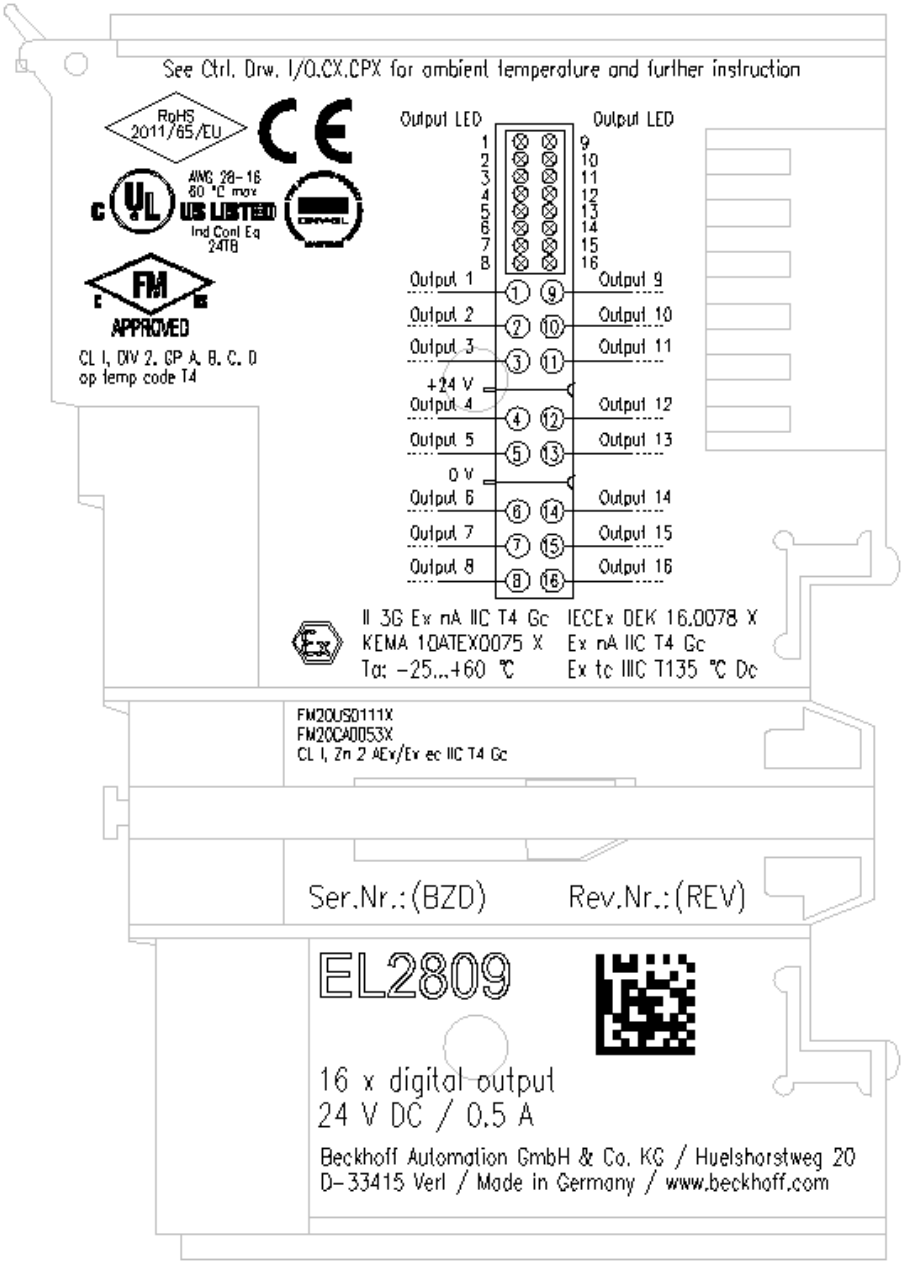

Fig. 76: EL2809 with Ex marking

3.4 Ex marking on KM housings

(EM, EL, EK, KM, KL)

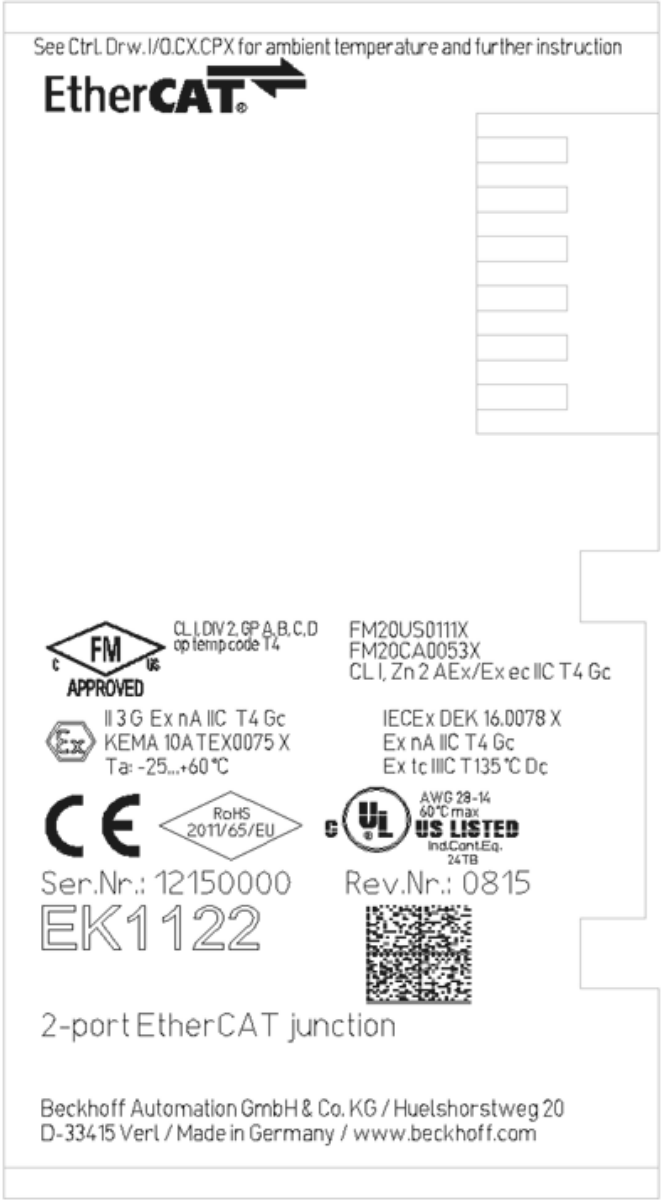

Fig. 77: EK1122 with Ex marking

3.5 Ex marking on measurement terminals

(ELM, EKM)

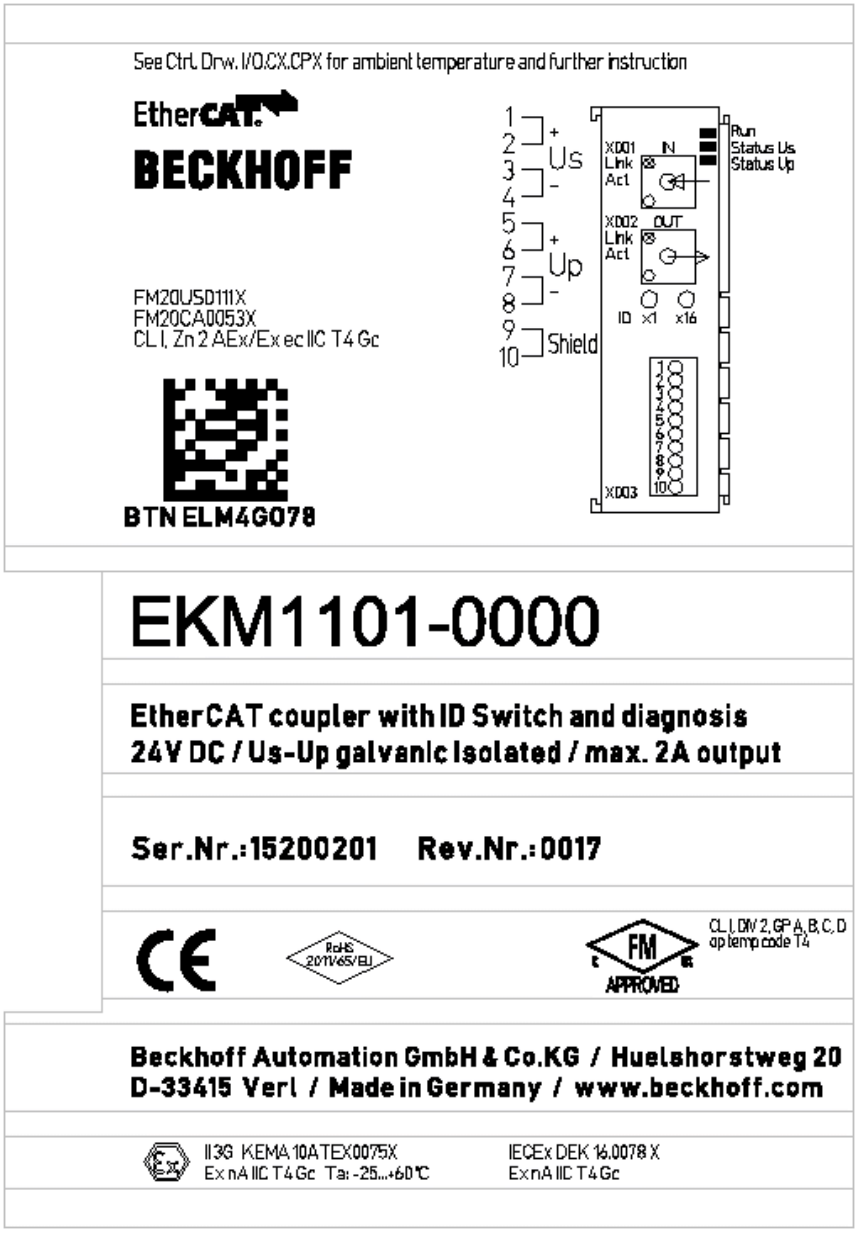

Fig. 78: EKM1101 with Ex marking

3.6 Ex markings on Control Panels and Panel PCs

(CPX)

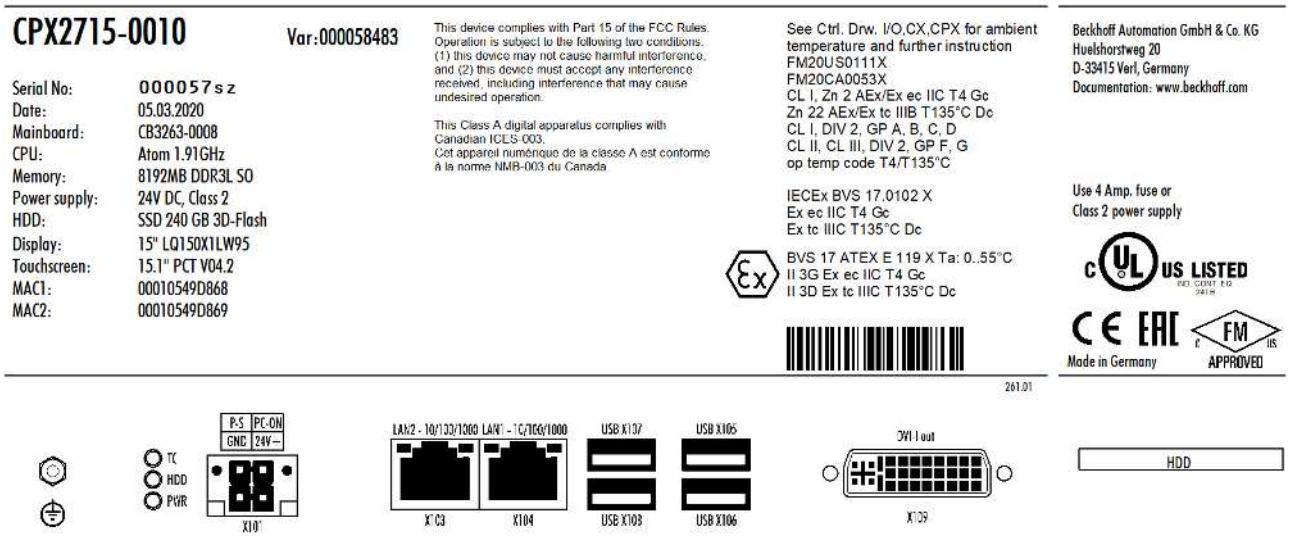

Fig. 79: CPX2715-0010 - Ex marking

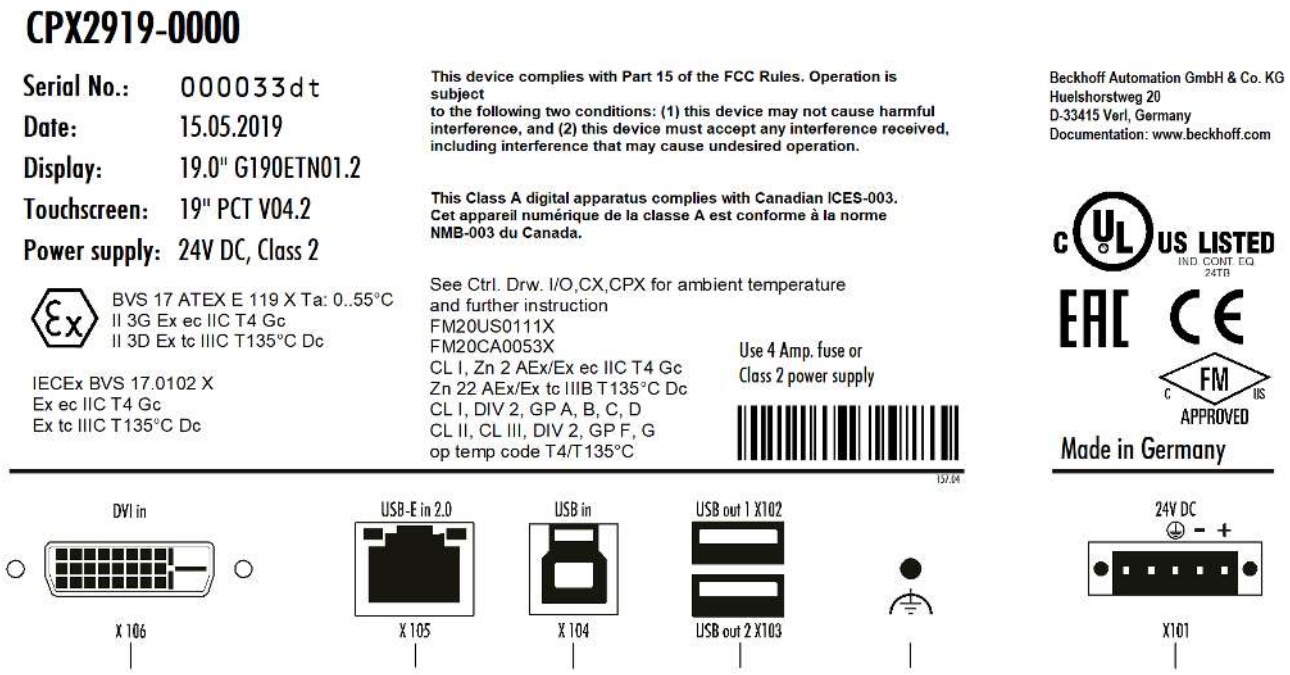

Fig. 80: CPX2919-0000 - Ex marking

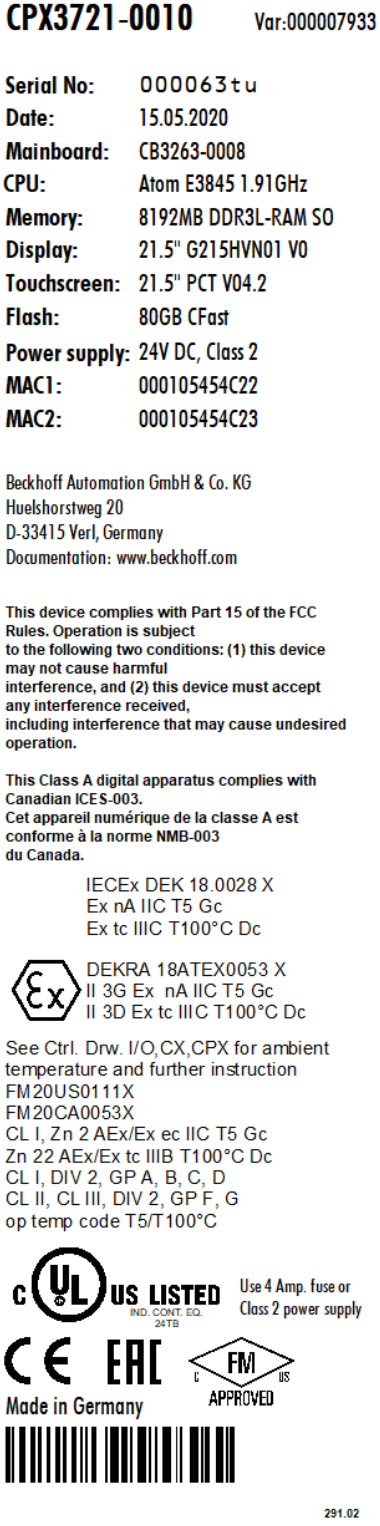

Fig. 81: CPX3721-0010 - Ex marking

Fig. 82: CPX3919-0010 - Ex marking

4 Appendix

4.1 Support and Service

Beckhoff and their partners around the world offer comprehensive support and service, making available fast and competent assistance with all questions related to Beckhoff products and system solutions.

Beckhoff's branch offices and representatives

Please contact your Beckhoff branch office or representative for local support and service on Beckhoff products!

The addresses of Beckhoff's branch offices and representatives round the world can be found on her internet pages: https://www.beckhoff.com

You will also find further documentation for Beckhoff components there.

Beckhoff Support

Support offers you comprehensive technical assistance, helping you not only with the application of individual Beckhoff products, but also with other, wide-ranging services:

- support
- design, programming and commissioning of complex automation systems
- and extensive training program for Beckhoff system components

Hotline:	+49 5246 963 157
Fax:	+49 5246 963 9157
e-mail:	support@beckhoff.com

Beckhoff Service

The Beckhoff Service Center supports you in all matters of after-sales service:

- on-site service
- repair service
- spare parts service
- hotline service

Hotline:	+49 5246 963 460
Fax:	+49 5246 963 479
e-mail:	service@beckhoff.com

Beckhoff Headquarters

Beckhoff Automation GmbH & Co. KG

Huelshorstweg 20
33415 Verl
Germany

Phone:	+49 5246 963 0
Fax:	+49 5246 963 198
e-mail:	info@beckhoff.com
web:	https://www.beckhoff.com

Table of figures

Fig. 1 EK1100 - Connection ... 10
Fig. 2 EK1101 - Connection ... 11
Fig. 3 EK1122-0000 - Connection ... 12
Fig. 4 EK1122-0008 - Connection ... 13
Fig. 5 EK9300 - Connection ... 14
Fig. 6 EKM1101 - Connection ... 15
Fig. 7 EL1002/ES1002 - Sensor connection ... 16
Fig. 8 EL1004/ES1004 - Sensor connection ... 17
Fig. 9 EL1008/ES1008 - Sensor connection ... 18
Fig. 10 EL1052/ES1052 - Sensor connection ... 19
Fig. 11 EL1054/ES1054 - Sensor connection ... 20
Fig. 12 EL1262/ES1262 - Sensor connection ... 21
Fig. 13 EL1918 - Sensor connection ... 22
Fig. 14 EL2008/EL2008 - Actuator connection ... 23
Fig. 15 EL2014 - Actuator connection ... 24
Fig. 16 EL2022/EL2022 - Actuator connection ... 25
Fig. 17 EL2535-0002/2535-0002 - Actuator connection ... 26
Fig. 18 EL2535-0005 - Actuator connection ... 27
Fig. 19 EL2794 - Actuator connection ... 28
Fig. 20 EL2809 - Actuator connection ... 29
Fig. 21 EL2904 - Actuator connection ... 30
Fig. 22 EL3044/ES3044 - Sensor connection ... 31
Fig. 23 EL3104/ES3104 - Sensor connection ... 32
Fig. 24 EL3124/ES3124 - Sensor connection ... 33
Fig. 25 EL3151/ES3151 - Sensor connection ... 34
Fig. 26 EL3152/ES3152 - Sensor connection ... 35
Fig. 27 EL3154/ES3154 - Sensor connection ... 36
Fig. 28 EL3174-0000 - Sensor connection ... 37
Fig. 29 EL3174-0002 - Sensor connection ... 38
Fig. 30 EL3174-0032 - Sensor connection ... 39
Fig. 31 EL3182/ES3182 - Sensor connection ... 40
Fig. 32 EL3204/ES3204 - Sensor connection ... 41
Fig. 33 EL3314 - Sensor connection ... 42
Fig. 34 EL3318 - Sensor connection ... 43
Fig. 35 EL3356-0010 - Sensor connection ... 44
Fig. 36 EL3702/ES3702 - Sensor connection ... 45
Fig. 37 EL4014/ES4014 - Actuator connection ... 46
Fig. 38 EL4022/ES4022 - Actuator connection ... 47
Fig. 39 EL4732/ES4732 - Actuator connection ... 48
Fig. 40 EL5152/ES5152 - Connection ... 49
Fig. 41 EL6021-0000 - Connection ... 50
Fig. 42 EL6021-1001 - Connection ... 51
Fig. 43 EL6070 - Connection ... 52
Fig. 44 EL6601 - Connection ... 53

Fig. 45 EL9550/ES9550 - Connection 54
Fig. 46 BK3120 - Connection 55
Fig. 47 KL1352/KS1352 - Sensor connection 56
Fig. 48 KL1501/KS1501 - Sensor connection 57
Fig. 49 KL2408/KS2408 - Actuator connection 58
Fig. 50 KL2502/KS2502 - Actuator connection 59
Fig. 51 KL3012/KS3012 - Sensor connection 60
Fig. 52 KL3054/KS3054 - Sensor connection 61
Fig. 53 KL4424/KS4424 - Actuator connection 62
Fig. 54 KL9010 - Connection 63
Fig. 55 KL9110/KS9110 - Connection 64
Fig. 56 CX5120 - Connection 65
Fig. 57 CX5130 - Connection 66
Fig. 58 CX5140 - Connection 67
Fig. 59 CX8010 - Connection 68
Fig. 60 CX8030 - Connection 69
Fig. 61 CX8031 - Connection 70
Fig. 62 CX8050 - Connection 71
Fig. 63 CX8051 - Connection 72
Fig. 64 CX8080 - Connection 73
Fig. 65 CX8090 - Connection 74
Fig. 66 CX8091 - Connection 75
Fig. 67 CX8093 - Connection 76
Fig. 68 CX8095 - Connection 77
Fig. 69 CX9020 - Connection 78
Fig. 70 CPX27xx 79
Fig. 71 CPX29xx 80
Fig. 72 CPX37xx 81
Fig. 73 CPX39xx 82
Fig. 74 EK1100 with Ex marking 83
Fig. 75 EL3152 with Ex marking 84
Fig. 76 EL2809 with Ex marking 85
Fig. 77 EK1122 with Ex marking 86
Fig. 78 EKM1101 with Ex marking 87
Fig. 79 CPX2715-0010 - Ex marking 88
Fig. 80 CPX2919-0000 - Ex marking 88
Fig. 81 CPX3721-0010 - Ex marking 89
Fig. 82 CPX3919-0010 - Ex marking 90

Beckhoff Automation GmbH & Co. KG
Hülshorstweg 20
33415 Verl
Germany
Phone: +49 5246 9630
info@beckhoff.com
www.beckhoff.com